MWE 209 FI 20L Built-in Microwave + Grill

Defrost by time | Defrost by weight | Direct access menu | 20L capacity

DESCRIPTION	20L Built-in Microwave + Grill
LIFE STYLE	Total
COLOURS	
REFERENCE	REF. 40581119 EAN. 8421152127230

MWE 209 FI

FEATURES

Built-in microwave + Grill
Capacity: 20 litres
Electronic control panel with white LED display
Quick start +30"
Double glass door
5 Power leves: 800 W.
Drop down grill: 1,000 W
Maximum nominal power: 1,250 W
8 Auto-cook menus
3 Cooking function (Mic, Grill, Mic-Grill)
Defrost by time and weight
Timer 0-95 minutes
Turntable 24.5cm
Safety block
Fingerprint-proof stainless steel
Stainless steel inner cavity

MWE 209 FI

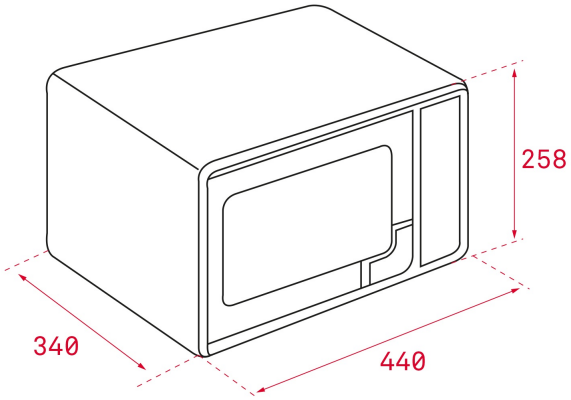

DIMENSIONS

Product height (mm): 340
Product width (mm): 463
Product depth (mm): 360
Product length (mm):
Net weight (Kg): 15,0

TECHNICAL DETAILS

FEATURES	**Certificates:** GS / EMC **Number of cooking functions:** 3 **Grill function:** Yes **Number of guide levels (lower cavity):** 0 **Microwave function:** Yes **Microwave + Grill function:** Yes **Number of power levels:** 5
ELECTRIC CONNECTION	**Maximum Nominal Power (W):** 1250 **Frequency (Hz):** 50 **Power rate (V):** 230 **Inside light Consumption (W):** 20
ENERGY CONSUMPTION	**Grill (W):** 1000 **Turbo (W):** 0
SAFETY SYSTEMS	**Children safety block option:** Yes

	Safety Thermostat: Yes
CLEANING SYSTEM	**Fingerprint proof stainless steel:** Yes
ACCESSORIES	**Glass Tray:** 1 **Crunch plate:** 0