DVT Pro 98660 TBS 90cm Vertical decorative hood with Contour Rim extraction system and Touch control display

LED lighting | Rim extraction | Stop delay timer | Fresh AIR function

DESCRIPTION	90cm Vertical decorative hood with Contour Rim extraction system and Touch control display
LIFE STYLE	Maestro
COLOURS	
REFERENCE	REF. 112930044 EAN. 8434778013269

DVT Pro 98660 TBS

FEATURES

Vertical decorative hood
Extraction rim system “Contour”
Touch control panel
FreshAir function
Full glass design
3 speeds + 1 intensive
Exhaust capacities: Free Outlet (m^3/h): 698
LED ilumination
EcoPower motor
Stop delay timer
Filter saturation indicator
Installation also possible without tube cover

DVT Pro 98660 TBS

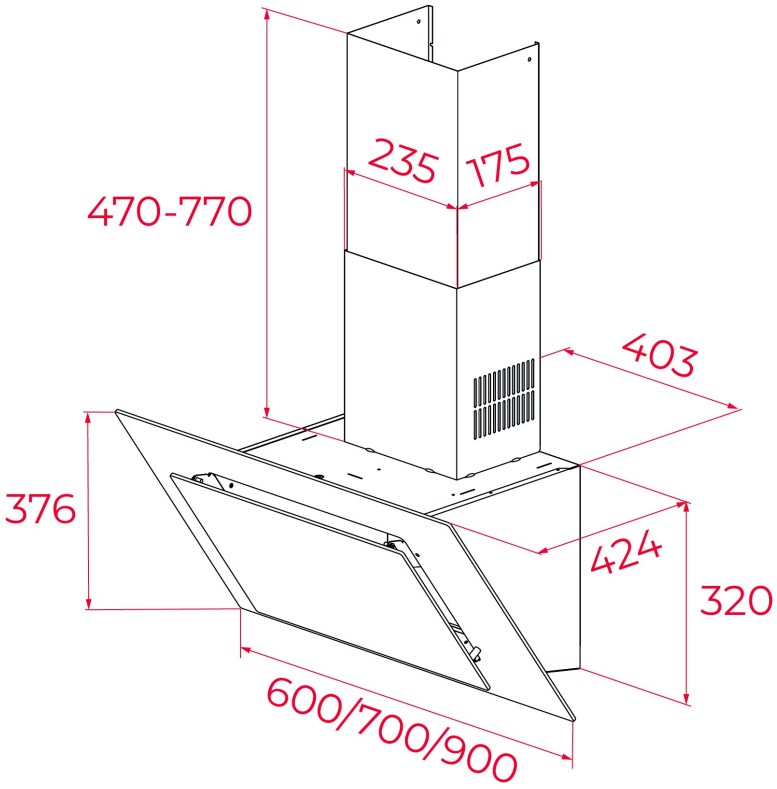

DIMENSIONS

Product height (mm): 800-1100
Product width (mm): 900
Product depth (mm): 412
Product length (mm):
Net weight (Kg): 16,2

TECHNICAL DETAILS

FEATURES

Ø Outlet (mm): 150
Removable oil collector: Yes
Dual Aspiration System: Yes
Type of inner light: LED
Inside light Consumption (W): 4,2
Plug type: Schuko plug
Cable Connection Length (cm): 100
Power rate (V): 220-240
Frequency (Hz): 50/60
Total hood power (W): 286
Number of motors: 1
Motor power (W): 280
Air flow (Qmin) m3/h: 307
Air flow (Qmax): 584
Air flow (Qboost): 698

ACCESSORIES

Anti Return valve: Yes
Outlet reduction: Yes
Outlet extension: No
Optional Charcoal Filter: C1RTK

Regenerative charcoal filter: R1RTK
Conventional recirculation kit (opt) - w/tube cover: CFH 15200 L2C
Regenerative recirculation kit (opt) - w/tube cover: RFH 15200 L2C
Conventional recirculation kit (opt) - w/o tube cover: CFH 15200 O2C
Regenerative recirculation kit (opt) - w/o tube cover: RFH 15200 O2C

MODELS

Number of filters: 2
Filter description: Aluminum Filters
Opening system: Piston
Control panel: Touch Control w/display
Stop delay timer: Yes
Filter saturation indicator: Yes
Number of speeds: 3 + 1
Fresh air function: Yes

DVT Pro 98660 TBS
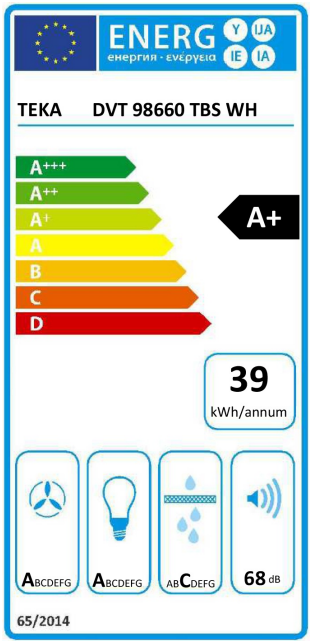
ENERGY LABEL