MaestroPizza HLB 8510 P

MaestroPizza Pyrolitic Oven with special Pizza funtion 340ºC



HydroClean

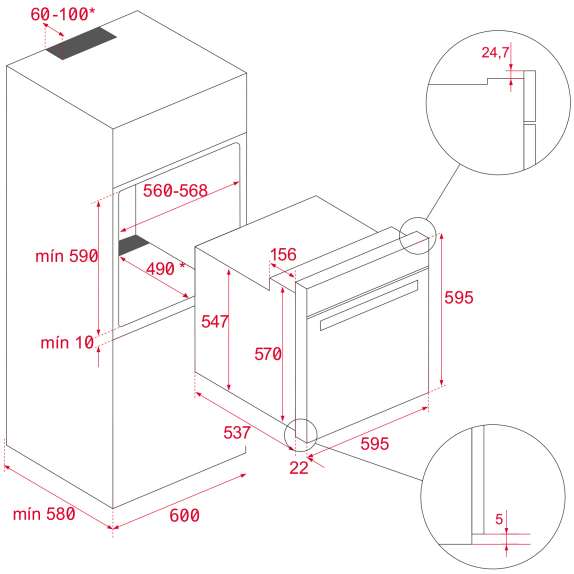

REFERENCE

REF: 111000049 **EAN:** 8434778018363

FEATURES

MaestroPizza Oven
340ºC extra Powerfull grill
Includes special stone for cooking pizza
Pyrolytic function and HydroClean® PRO cleaning system

DIMENSIONS

Product height (mm): 595
Product width (mm): 595
Product depth (mm): 537+22
Product length (mm):
Net weight (Kg): 34

TECH SPECS

Energy Efficiency Class: A+
Power rate (V): 220/240
Frequency (Hz): 50/60
Maximum Nominal Power (W): 3552

COLORS

111000049 Black Glass