# AirFry HLB 8416 BK

Multifunction SurroundTemp oven with special AirFry function

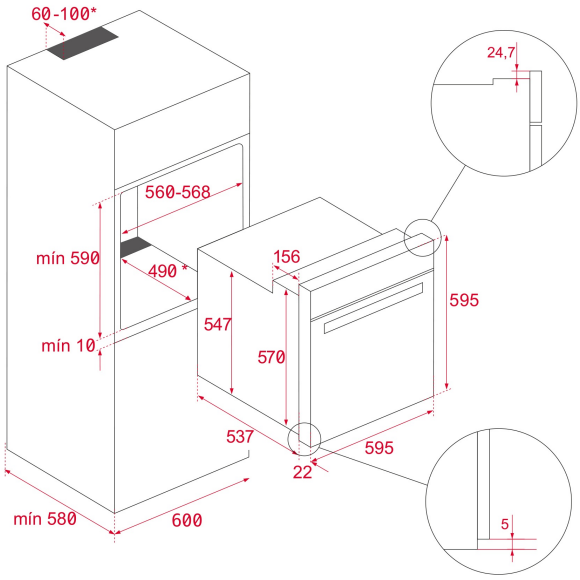


## REFERENCE

REF: 111000048 EAN: 8434778018356

## FEATURES

AirFry oven
Urban Colors Edition
Multifunction SurroundTemp oven
9 cooking functions
Special FryMaster Box to cook without oil
Automatic HydroClean system
Touch control display with knobs
Electronic timer (Delay/Start function)
Chrome supports with 5 cooking levels
Removable triple glazed door
SoftClose system
Children safety lock
Manual quick preheating
Anti-tip deep tray
Capacity (gross/net): 71 / 70 litres

## DIMENSIONS

**Product height (mm):** 595
**Product width (mm):** 595
**Product depth (mm):** 538+22
**Product length (mm):**
**Net weight (Kg):** 28

## TECH SPECS

Energy Efficiency Class: -
Power rate (V): -
Frequency (Hz): -
Maximum Nominal Power (W): -

## COLORS

111000048 Black Glass