HSB 615

60cm Multifunction Oven and HydroClean system



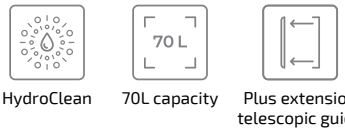

HydroClean | 70L capacity | Plus extension telescopic guide

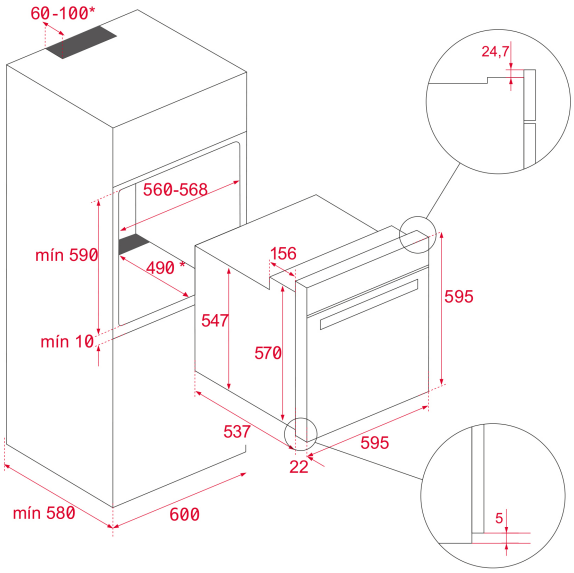

REFERENCE

REF: 41560120 **EAN:** 8421152148648

FEATURES

Multifunction oven
6 cooking functions
HydroClean system
Mechanical control knobs
Mechanical timer (Stop function)
Chrome supports with 5 cooking levels
Plus-extension telescopic guides
Removable double glazed door
Manual quick preheating
Anti-tip deep tray
Capacity (gross/net): 71 / 70 litres

DIMENSIONS

Product height (mm): 595
Product width (mm): 595
Product depth (mm): 537+22
Product length (mm):
Net weight (Kg): 27

TECH SPECS

Energy Efficiency Class: A
Power rate (V): 220-240
Frequency (Hz): 50/60
Maximum Nominal Power (W): 2615

COLORS

41560120 Stainless Steel