IC

Single Lever Kitchen Faucet With High Spout Swivel Aerator





Anti-scale aerator



Swivel spout

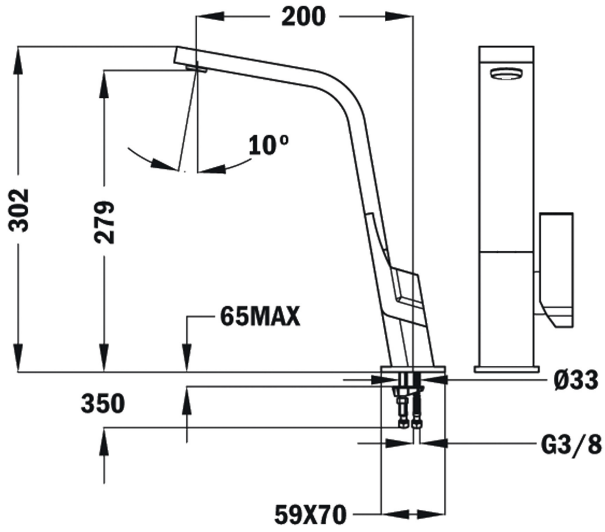

REFERENCE

REF: 339150210 **EAN:** 8421152090398

FEATURES

Flat Swivel Spout
Anti-Scale Aerator

DIMENSIONS

Product height (mm): 302
Product width (mm):
Product depth (mm):
Product length (mm):
Net weight (Kg): 2,4

COLORS

339150210 Chrome

33915020N Black