MWR 22 BI

22L Built-in Microwave with ceramic base

Ceramic base | Defrost by time | Electronic door opening | 22L capacity

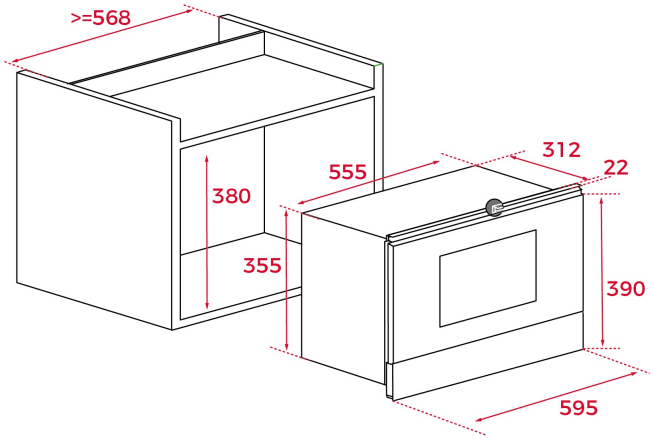

REFERENCE

REF: 40586302 EAN: 8421152141014

FEATURES

Country Style Edition
Ceramic base microwave + grill
Electromechanical control
Five power levels, 850 W out
Stainless steel cavity
Ceramic base with uniform heating
Forced tangential ventilation
Auto defrost by time

DIMENSIONS

Product height (mm): 380/390
Product width (mm): 595
Product depth (mm): 334
Product length (mm):
Net weight (Kg): 21,6

TECHNICAL DETAILS

MWO Power (W): 850
Frequency (Hz): 50
Maximum Nominal Power (W): 1400
Grill (W): -

COLOURS