Artic TGI2 120 D 82cm A+ Built-in Freezer

Easy 90, opening on its own axis for a perfect installation

DESCRIPTION	82cm A+ Built-in Freezer
LIFE STYLE	Total
COLOURS	
REFERENCE	REF. 40694000 EAN. 8421152084915

Artic TGI2 120 D

FEATURES

Built-under freezer
Electronic control panel
4* freezer
3 freezer drawers
Door on door installation
Reversible door
Energy Class: A+
Climate Class: SN-T
Noise level: 39 dBA
Total gross capacity: 96 litres
Net capacity: 87 litres

Artic TGI2 120 D

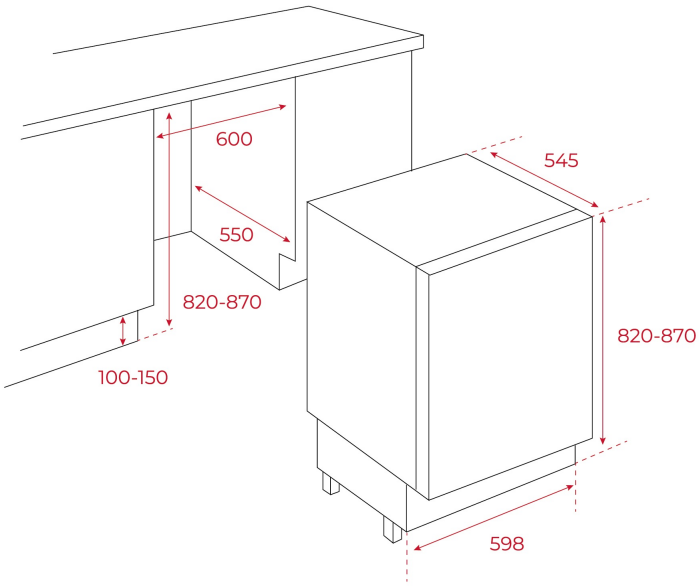

DIMENSIONS

Product height (mm): 818
Product width (mm): 595
Product depth (mm): 545
Product length (mm):
Net weight (Kg): 31

TECHNICAL DETAILS

FITTING MEASURES	**Built-in niche (cm):** 82
PRODUCT SHEET	**Cooling system:** Defrost **Total gross capacity (litres):** 96 **Freezer compartment capacity (litres):** 87 **Freezer classification:** 4 **Freezing capacity:** 6 **Temperature Rise Time (h):** 19 **Climate class:** SN/T **Noise level (dB):** 42
POWER SUPPLY	**Frequency (Hz):** 50 **Power rate (V):** 230 **Power rate (W):** 75 **Energy consumption (kw/day):** 0,501 **Plug type:** European **Cable Connection Length (cm):** 193

FEATURES	**Type of installation:** Built-in **Electronic control:** Yes **Control panel:** Electronic **Electronic adjustable thermostat:** Yes **Antibacterial treatment:** NO **Fast freezing:** Yes **Reversible doors:** Yes
CONTROL INDICATOR LIGHTS	**Operating light freezer:** Yes **Fast freezing indicator:** Yes
EQUIPMENT	**Antibacterial gasket:** Yes **Ice cubes tray:** 1 **Adjustable feet front:** Yes

Artic TGI2 120 D
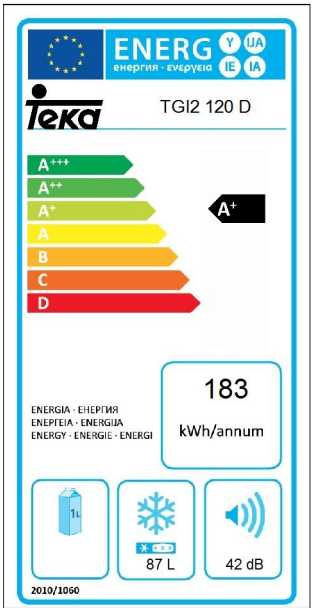
ENERGY LABEL