FORMENTERA FORMENTERA WASHBASIN MIXER BLACK

DESCRIPTION	FORMENTERA WASHBASIN MIXER BLACK
LIFE STYLE	Formentera
COLOURS	
REFERENCE	REF. 62346120NC EAN. 8413509215134

FORMENTERA

FEATURES

Without pop up waste
Constant optimized water consumption with a real water saving system.
1/2” flexible inlet pipes
Anti-scale aerator
Quality Certification: ACS

FORMENTERA

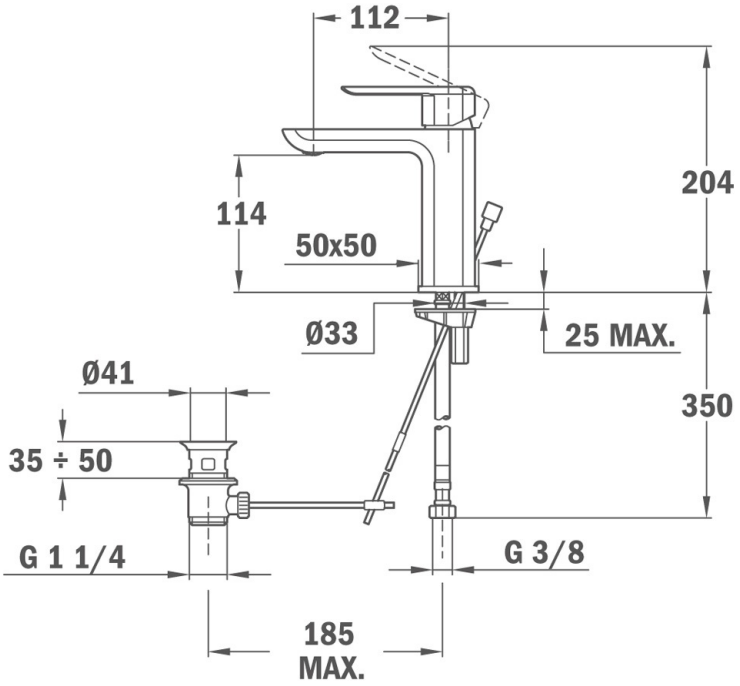

DIMENSIONS

Product height (mm):
Product width (mm):
Product depth (mm):
Product length (mm):
Net weight (Kg):

TECHNICAL DETAILS

MODELS	**Type of installation:** Free standing