EX 60.1 3G AI AL DR CI LPG 60cm Gas hob with 3 high efficiency LPG gas burners and cast iron grids

Integrated auto-ignition system

Autolock

DESCRIPTION	60cm Gas hob with 3 high efficiency LPG gas burners and cast iron grids
LIFE STYLE	Total
COLOURS	
REFERENCE	REF. 40212021 EAN. 8421152152133

EX 60.1 3G AI AL DR CI LPG

FEATURES

Gas typology : LPG (butane/propane)
60cm gas hob
Double ring burner
Cast iron grids with a professional look
Metallic and glossy black looking frontal knobs
Auto-ignition
Auto-lock safety device
High Efficiency burners.
3 cooking zones:
– 1 double ring burner (4.00 KW)
– 1 fast burner (2.8 kW)
– 1 semi-fast burner (1.75 kW) Maximum rated power: 8.55kW

EX 60.1 3G AI AL DR CI LPG

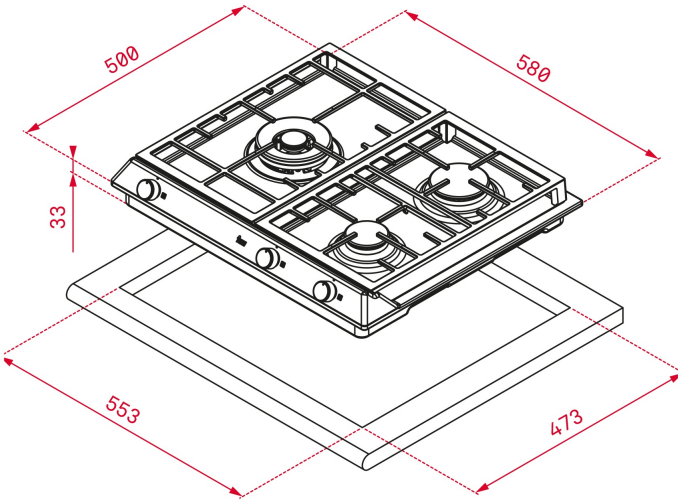

DIMENSIONS

Product height (mm): 84
Product width (mm): 580
Product depth (mm): 500
Product length (mm):
Net weight (Kg): 9,5

TECHNICAL DETAILS

FITTING MEASURES	**Built-in Width (mm):** 553 **Built-in Depth (mm):** 473 **Built-in height (mm):** 32
FEATURES	**Gas type:** Butane **Maximum nominal power (W) (Gas):** 8550 **Autoignition:** Yes
ELECTRIC CONNECTION	**Frequency (Hz):** 50/60 **Power rate (V):** 220-240 **Cable Connection Length (cm):** 100
COOKING ZONES	**Cooking Zones:** 3
SAFETY SYSTEMS	**Automatic safety disconnection (Auto Lock) (Gas):** Yes

FINISH	**Surface finishing:** Brushed stainless steel **Surface type:** Stainless Steel
ACCESSORIES	**Grid type:** Full Grid **Wok support:** Optional **Junction Kit:** NO **Cast Iron Grids:** Yes **Teppan Yaki:** NO