TL 6310 SS

Pull-out hood with double motor turbine and 2 speeds

LED

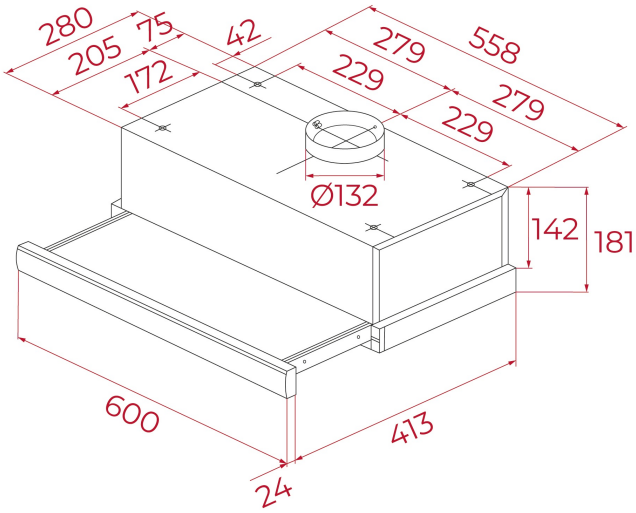

REFERENCE

REF: 40474250 EAN: 8421152145975

FEATURES

Pull-out hood
Mechanical control
2 speeds
Free Outlet exhaust capacity (m3/h): 366
Max speed exhaust capacity (m3/h): 332
Min speed exhaust capacity (m3/h): 233
Max speed sound level (dBA): 54
Min speed sound level (dBA): 45
2 LED lamps
2 aluminium filters
Exchangeable front panel
Anti-return valve included
Optional Charcoal Filter: CNL 1C

DIMENSIONS

Product height (mm): 181
Product width (mm): 600
Product depth (mm): 304-437
Product length (mm):
Net weight (Kg): 6,1

TECHNICAL DETAILS

Energy Efficiency Class: D
Noise (LwA) Min Speed (dB): 49
Noise (LwA) Max Speed (dB): 65
Noise (LwA) Boost Speed (dB): N/A
Ø Outlet (mm): 120

COLOURS

40474250 Stainless steel