MLC 8440 BK
Urban Colors Edition. Compact built-in microwave with grill and touch control, 45cm

Defrost By Time | Defrost By Weight | 44L

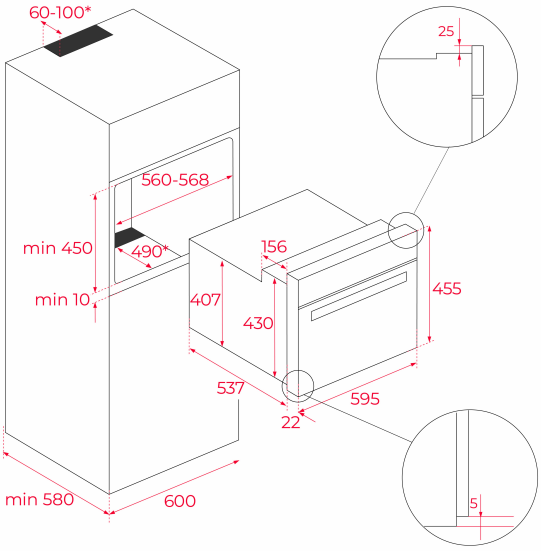

REFERENCE

REF: 111160003 EAN: 8434778007657

FEATURES

Urban Colors Edition
Microwave + Grill
3 cooking functions
5 power levels + 1000 W microwave power
1400 W grill
Defrost by time and weight
Touch control display with knobs
Electronic timer (Delay/Start function)
Chrome supports with 5 cooking levels
Removable double glazed door
Automatic disconnection security system
Reinforced grid
Capacity (gross/net): 45 / 44 litres

DIMENSIONS

Product height (mm): 455
Product width (mm): 595
Product depth (mm): 559
Product length (mm):
Net weight (Kg): 28,4

TECHNICAL DETAILS

MWO Power (W): 1000
Frequency (Hz): 50
Maximum Nominal Power (W): 3200
Grill (W): 1400

COLOURS

111160003 Black glass

111160004 Stone grey glass