MAESTRO **DFS 26610 SS**

60 cm free standing dishwasher HomeCare Series with 12 place settings and 6 washing programs

Eco Function

Extra Dry function

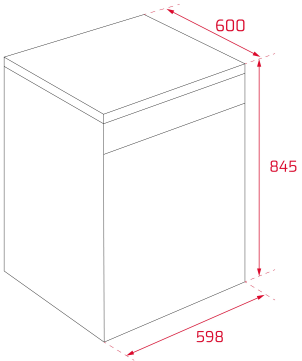

REFERENCE

REF: 114280003 EAN: 8434778013887

FEATURES

HomeCare series
Free standing Dishwasher
Electronic control panel with display
Capacity: 12 plate settings
Washing programs: 6
Washing temperatures: 45°, 50°, 55°, 60°, 65° C
Special programs: GlassCare, Intensive program, ECO program, 1-Hour, Whisper program
Special functions: Half load, Express, ExtraDry
AquaSafe safety system
Low salt and rinse indicator
Delay timer: 1-24 hours
Noise level: 49 dBA
Sliding Detergent drawer
Column installation

DIMENSIONS

Product height (mm): 845
Product width (mm): 598
Product depth (mm): 600
Product length (mm):
Net weight (Kg): 42

TECHNICAL DETAILS

Energy Efficiency Class: A+
Energy Consumption (Kw/day): -
Water consumption (litres/year): 3220
Noise Level (dBA): 49
Power rate (V): 220
Frequency (Hz): 50

COLOURS

114280003 Stainless Steel

114280002 White