MAESTRO **DFS 46750 SS**

60 cm semi freestanding dishwasher ExpertCare Series with 14 place settings and 7 washing programs

Eco Function

AutoDoor opening system

Water dirtiness sensor Aqualogic

REFERENCE

REF: 114210001 EAN: 8434778017403

FEATURES

ExpertCare series
Free standing Dishwasher
Electronic control panel with display
Capacity: 14 plate settings
Washing programs: 7
Washing temperatures: 50°, 55°, 60°, 65°, 70°C
PremiumDry automatic opening system
SmartSensor measure the level of dirtiness
FlexiSet 2 lower basket
Special programs: AutoClean, AutoProgram, Intensive program, ECO program, 1-Hour, Whisper program, PreWash
Special functions: Half load, Express, ExtraDry
AquaSafe safety system
Low salt and rinse indicator
Adjustable upper basket
Delay timer: 1-24 hours
Noise level: 46 dBA
Sliding Detergent drawer
Column installation

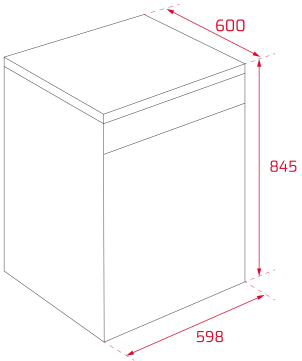

DIMENSIONS

Product height (mm): 845
Product width (mm): 598
Product depth (mm): 600
Product length (mm):
Net weight (Kg): 45,5

TECHNICAL DETAILS

Energy Efficiency Class: A+++
Energy Consumption (Kw/day): -
Water consumption (litres/year): 3080
Noise Level (dBA): 46
Power rate (V): 220
Frequency (Hz): 50

COLOURS

114210001 Stainless Steel

114210000 White