GZC 32300 XB
VarioPro Series. Modular Gas on Glass hob with ExactFlame function of natural gas

Auto ignition | Autolock | ExactFlame | Easy installation

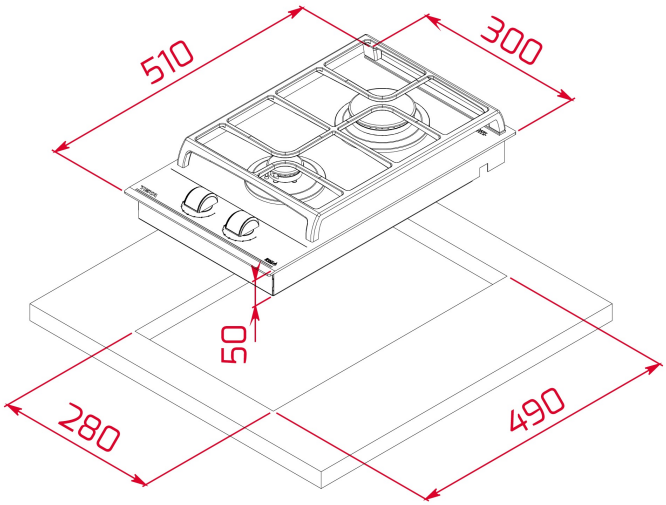

REFERENCE

REF: 112570196 EAN: 8434778019452

FEATURES

Urban Colors Edition
Modular gas on glass hob
ExactFlame
Frontal control knobs with ergonomic design
2 cooking zones
1 fast ring burner, 2.8 kW
1 auxiliary burner, 1 kW
Ceramic glass surface
Auto ignition
Auto-lock safety system
Cast iron grids
Easy installation kit
Maximum nominal power 3800 W

DIMENSIONS

Product height (mm): 98
Product width (mm): 300
Product depth (mm): 510
Product length (mm):
Net weight (Kg): 6,25

TECHNICAL DETAILS

Power rate (V): 220-240
Frequency (Hz): 50/60
Maximum Nominal Power (W): -

COLOURS

112570196 Black glass

ENERGY EFFICIENCY

Power consumption in standby mode (W): -
Time to reach standby mode (min): -