MAESTRO **Stone 80 B-TG 2B 1D**

Inset Tegranite sink with two bowls and one drainer

200mm depth | Colour Intensity | Easy Clean | Food safe | High resistance

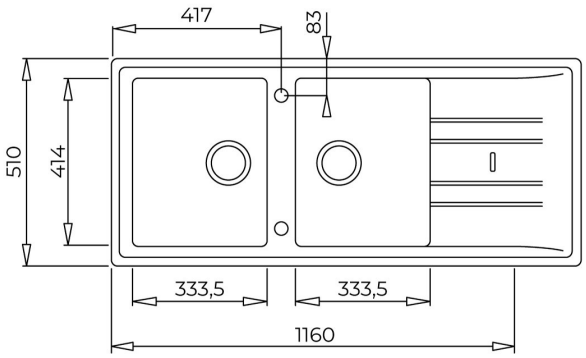

REFERENCE

REF: 115400010 EAN: 8434778004922

FEATURES

Tegranite+ sink
Two bowls and one drainer
Inset installation
3½" automatic basket waste with siphon
200 mm deep bowls
80 cm base unit

DIMENSIONS

Product height (mm):
Product width (mm): 510
Product depth (mm): 200
Product length (mm): 1160
Net weight (Kg): 18,5

COLOURS

115400010	Sandbeige
115400014	White
115400014	Topasbeige
115400014	Metallic Black
115400014	Carbon
115400014	Metallic Grey
115400014	Dark Grey