MAESTRO **Diamond RS15 2B 1D**

Inset glass sink with two bowls and one drainer

REFERENCE

REF: 115160007 EAN: 8434778004809

FEATURES

Diamond Series
Stainless steel and glass sink
Two inox bowls and one drainer
Safety tempered glass with bevelled edges
Inset installation
Easy clean radius R15 corners
3½" SQ automatic basket waste with siphon
Decorative SQ cover
SilentSmart, 50% less noise
200 mm deep bowls
80 cm base unit

200mm depth | Antibacterial | Lifetime warranty + SilentSmart | R15, easy to clean

DIMENSIONS

Product height (mm):
Product width (mm): 510
Product depth (mm): 200
Product length (mm): 1160
Net weight (Kg): 4,6

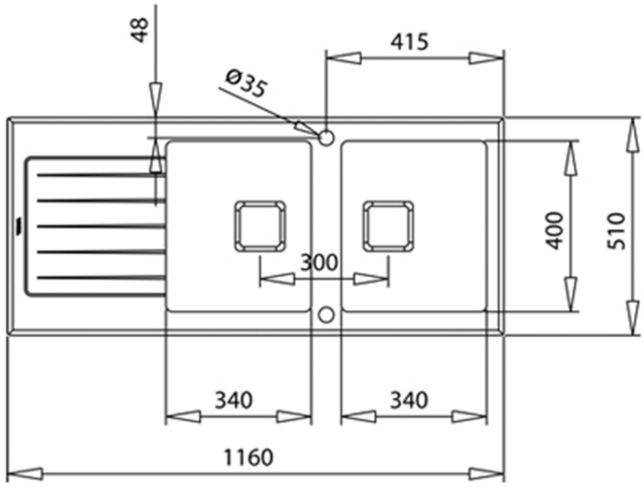

COLOURS

115160007 Black