MAESTRO **Diamond RS15 1B**

Inset glass sink with one bowl

200mm depth | Antibacterial | R15, easy to clean

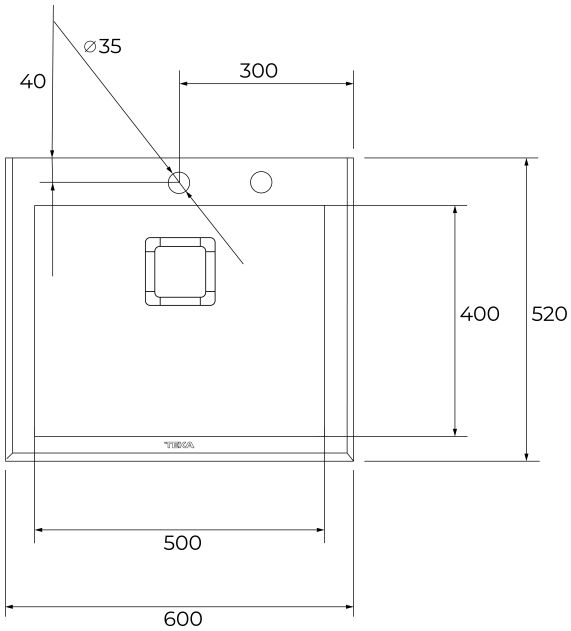

REFERENCE

REF: 115000075 EAN: 8434778026818

FEATURES

Diamond Series
Stainless steel and glass sink
One inox bowl
Safety tempered glass with bevelled edges
Inset installation
Easy clean radius R15 corners
3½" SQ automatic basket waste with siphon
Decorative SQ cover
SilentSmart, 50% less noise
200 mm deep bowl
60 cm base unit

DIMENSIONS

Product height (mm):
Product width (mm): 520
Product depth (mm):
Product length (mm): 600
Net weight (Kg): 6,20

COLOURS

115000075 Black