AirFry HLC 8406 BK
Multifunction compact oven with special AirFry function, 9 cooking functions and HydroClean system

44L | HydroClean steam cleaning system | SurroundTemp

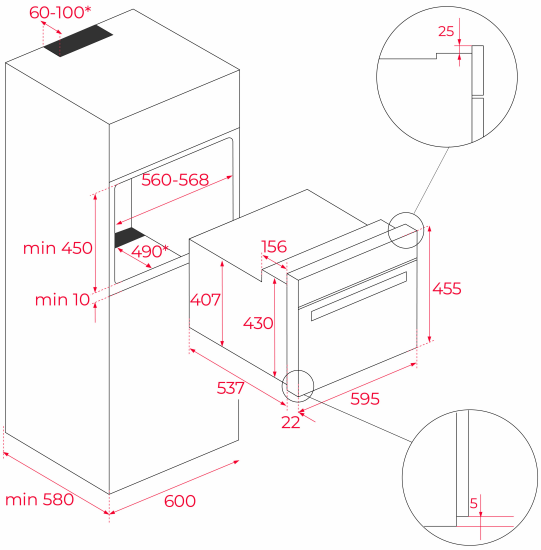

REFERENCE

REF: 111130009 EAN: 8434778026535

FEATURES

Multifunction SurroundTemp oven
9 cooking functions
Special FryMaster Box to cook without oil
Automatic HydroClean system
Touch control display with knobs
Chrome supports with 3 cooking levels
1 telescopic guide with easy slide
Removable triple glazed door
Automatic disconnection security system
Manual quick preheating
Anti-tip deep tray and reinforced grid
Capacity (gross/net): 45/44 L

DIMENSIONS

Product height (mm): 455
Product width (mm): 595
Product depth (mm): 537+22
Product length (mm):
Net weight (Kg): 25

TECHNICAL DETAILS

Energy Efficiency Class: A+
Power rate (V): 220/240
Frequency (Hz): 50/60
Maximum Nominal Power (W): 3015

COLOURS

111130009 Black glass