**AutoDose WMK 81050 DSS**
Washing machine with 10 kg capacity, AutoDose system and 14 programs

Quick Cycle

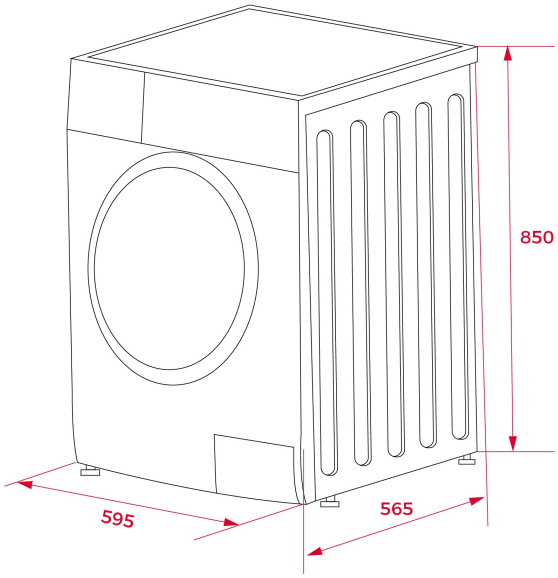


## REFERENCE

REF: 113900011 EAN: 8434778023244

## FEATURES

Free standing washing machine
AutoDose system
Inverter Motor
Electronic control panel with display
Washing capacity: 10 kg
14 washing programs
Special programs: Fast program: 15 minutes, ECO mode program, wool care program, sport program
Special functions: Delay timer function, speed wash function, steam function, extra rinse function
SmartWash system
Maximum spinning speed: 1500 RPM
Automatic water regulation
Automatic door lock safety system
Child lock
Balance control system
48 cm wide porthole door

## DIMENSIONS

**Product height (mm):** 850
**Product width (mm):** 595
**Product depth (mm):** 565
**Product length (mm):**
**Net weight (Kg):** 72

## TECHNICAL DETAILS

Energy efficiency class (UE 2019/2016): A
Washing performance Class: A
Spinning efficiency class: B
Water consumption (litres/year): N/A
Noise Level (dBA): + 80
Power rate (V): 220-240
Frequency (Hz): 50

## COLOURS