HSF 900 90cm Multifunction Oven with 77L capacity

77L

HydroClean

DESCRIPTION	90cm Multifunction Oven with 77L capacity
LIFE STYLE	Total
COLOURS	
REFERENCE	REF. 41592220 EAN. 8421152154588

HSF 900

FEATURES

Multifunction oven
7 cooking functions
HydroClean system
Mechanical control knobs
Mechanical timer
Chrome supports with 5 cooking levels
Removable double glazed door
Manual quick preheating
Anti-tip deep tray and reinforced grid
Capacity (gross/net): 91 / 77 litres

HSF 900

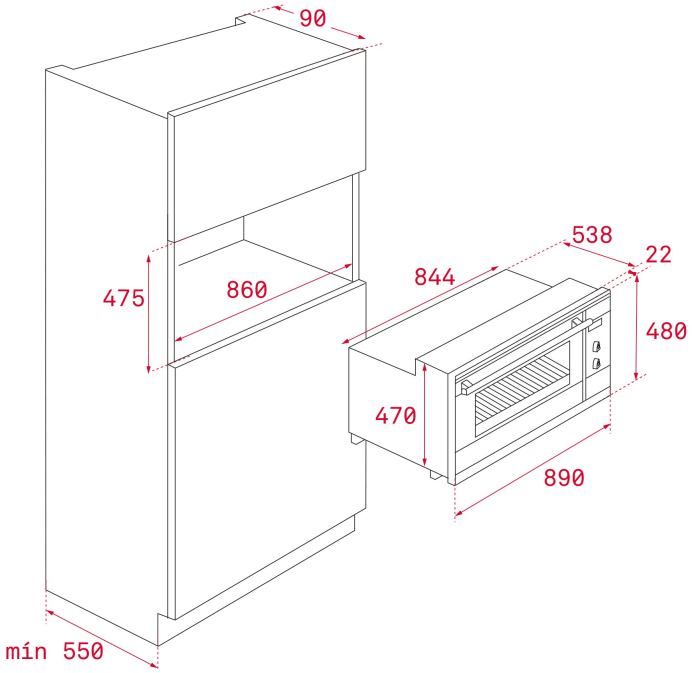

DIMENSIONS

Product height (mm): 480
Product width (mm): 890
Product depth (mm): 538+22
Product length (mm):
Net weight (Kg): 44

TECHNICAL DETAILS

FEATURES

Certificates: N / CE / CCA / CB /GMARK
Number of cavities: 1
Type of inner light: Halogen
Inside light position: SIDE
Enamelled cavity: Yes
Min. Temperature Regulator (ºC): 50
Max. Temperature Regulator (ºC): 250
Function selector: 7+0
Number of cooking functions: 7
Top + Bottom function: Yes
Grill + Bottom function: Yes
Grill function: Yes
MaxiGrill function: Yes
Top + Bottom + Fan function: Yes
MaxiGrill + Fan function: Yes
Bottom function: Yes
Minute Minder: Yes
Knobs type: MMX FIX KNOB knurling
Removable chromed tray guides: Yes
Number of guide levels: 5
Drop-down grill: Yes
Forced refrigeration tangential 1 speed: Yes

ELECTRIC CONNECTION	**Maximum Nominal Power (W):** 2848 **Frequency (Hz):** 50/60 **Power rate (V):** 220-240 **Cable Connection Length (cm):** 110 **Inside light Consumption (W):** 25
ENERGY CONSUMPTION	**Energy consumption per cycle in conventional mode (kWh):** 0.99 **Energy consumption per cycle in fan-forced convection mode (kWh):** 0,9 **Bottom Heating Element (W):** 1055 **Grill (W):** 1700 **Maxi Grill (W):** 2750 **Traditional (W):** 2105 **Multifunction Turbo (W):** 30 **Cooling Fan Motor (W):** 18
SAFETY SYSTEMS	**Grill protection:** Yes **Anti-tip tray system:** Yes **Safety Thermostat:** Yes
CLEANING SYSTEM	**Fingerprint proof stainless steel:** Yes **Crystal Clean Enamel (Slippery):** Yes **Hydroclean ECO:** Yes
ACCESSORIES	**Deep Tray (50 mm):** 1 **Reinforced grid:** 1
ENERGY EFFICIENCY	**Energy Efficiency Class:** A **Energy Efficiency Index (EEI):** 103,4

HSF 900
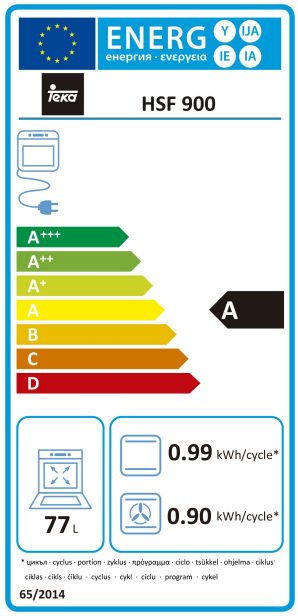
ENERGY LABEL