# **TZ 6420** 60cm Vitroceramic Hob with 4 zones and Touch Control

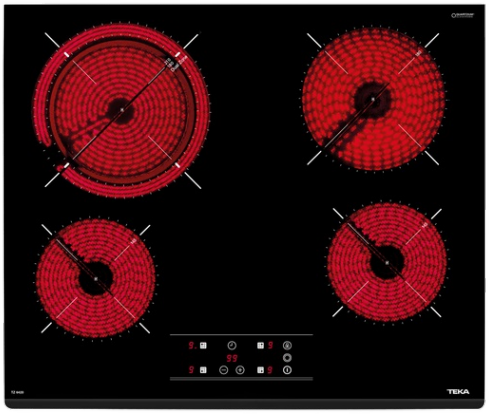

Autolock

Power Plus

Easy installation

| | |
|---|---|
| **DESCRIPTION** | 60cm Vitroceramic Hob with 4 zones and Touch Control |
| **LIFE STYLE** | Total |
| **COLOURS** | |
| **REFERENCE** | REF. 40239020<br>EAN. 8421152148174 |

# TZ 6420

**FEATURES**

Vitroceramic hob
Touch Control
4 cooking zones
1 high lights Ø 180/210 mm
1 high lights Ø 180 mm
2 high lights Ø 145 mm
Ceramic glass surface
Auto-lock safety system
Cooking timer
Power plus
Child lock
Residual heat indicator
Easy installation kit
Maximum nominal power 6200 W

TEKA

# TZ 6420

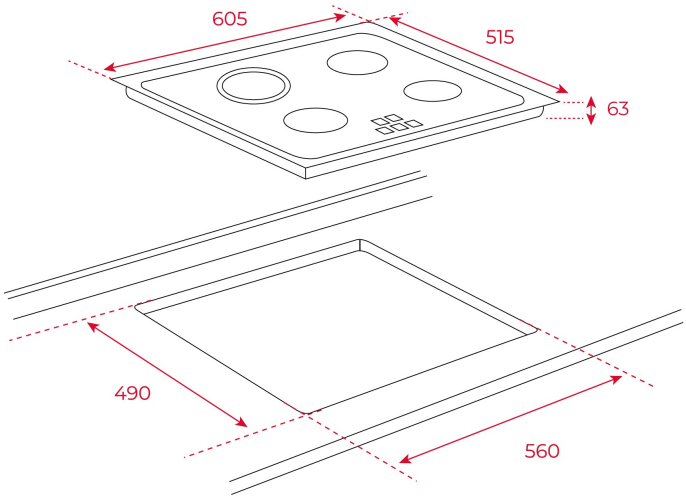


## DIMENSIONS

**Product height (mm):** 51
**Product width (mm):** 600
**Product depth (mm):** 510
**Product length (mm):**
**Net weight (Kg):** 8,9

## TECHNICAL DETAILS

| | |
|---|---|
| **FITTING MEASURES** | **Built-in Width (mm):** 560<br>**Built-in Depth (mm):** 490<br>**Built-in height (mm):** 51 |
| **FEATURES** | **Number of electric power levels:** 9 |
| **ELECTRIC CONNECTION** | **Frequency (Hz):** 50/60<br>**Power rate (V):** 220-240<br>**Cable Connection Length (cm):** 100<br>**Maximum Nominal Power (W) (Electric hob):** 6200 |
| **COOKING ZONES** | **Cooking Zones:** 4<br>**Energy consumption for the whole hob, Wh/Kg:** 188,72 |
| **SAFETY SYSTEMS** | **Residual heat indicator (Gas):** Yes<br>**Residual heat indicator (Electric hob):** Yes |

**Automatic safety disconnection (Auto Lock) (Electric hob):** Yes
**Safety Blocking:** Yes
**Child lock:** Yes

## FINISH

**Surface finishing:** Front bevelled glass
**Surface type:** Ceramic Glass (4mm)
**Easy installation system:** Yes

## ACCESSORIES

**Junction Kit:** Optional
**Teppan Yaki:** Optional