TKS 893 H Free-stranding dryer A+++ condensate heat pump with capacity of 8 kg

Hand Wash

Washing capacity: 8Kg

DESCRIPTION	Free-stranding dryer A+++ condensate heat pump with capacity of 8 kg
LIFE STYLE	Maestro
COLOURS	
REFERENCE	REF. 40854002 EAN. 8421152160848

TKS 893 H

FEATURES

Free Standing Dryer
Condensed heat pump drying technology
ExcellentDry sensor
Electronic control panel
Drying capacity: 8 kg
Drying programs: 16
ECO mode program
Delay timer: 1-23 hours
48 cm wide porthole door

TKS 893 H

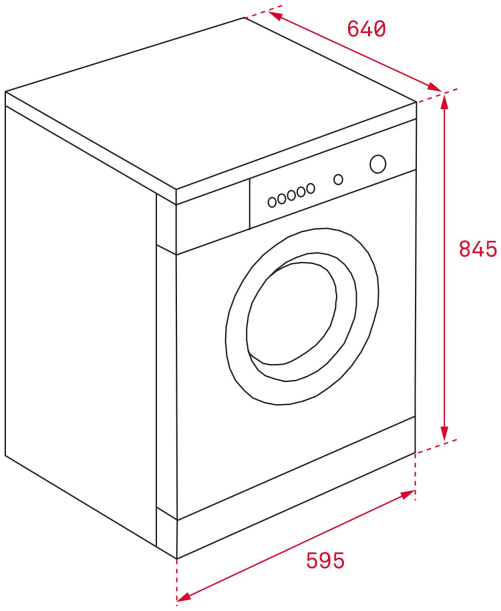

DIMENSIONS

Product height (mm): 845
Product width (mm): 595
Product depth (mm): 650
Product length (mm):
Net weight (Kg): 48

TECHNICAL DETAILS

PRODUCT SHEET

Type of installation: Free Standing
Drying capacity (Kgs): 8
Condensation efficiency: B
Energy consumption per drying cycle (Full load) (kWh): 1.94
Energy consumption (kWh/year): 1,46
Duration of drying cycle (Full load) (minutes): 135
Automatic (sensor drying): Yes
Certificates: CE./CB

POWER SUPPLY

Frequency (Hz): 50
Power rate (V): 220-240
Maximum Nominal Power (W): 2700

FEATURES

Glass door diameter (cms): 48
Number of programs: 16
Control panel: ELECTRONIC
Child lock: Yes
Drum light: Yes
Drum: Galvanized

CONTROL INDICATOR LIGHTS	**Selected program indicator:** Yes **Remaining time:** Yes **Drying:** Yes **Dryer timer:** Yes
SPECIAL FUNCTIONS	**Economic program:** Yes **Delayed Timer (h):** 1-24 hours **Delicate fabrics:** Yes **Resistant:** Yes **Easy ironing/anti crease:** Yes
EQUIPMENT	**Adjustable Feet Back:** Yes **Adjustable feet front:** Yes

TKS 893 H
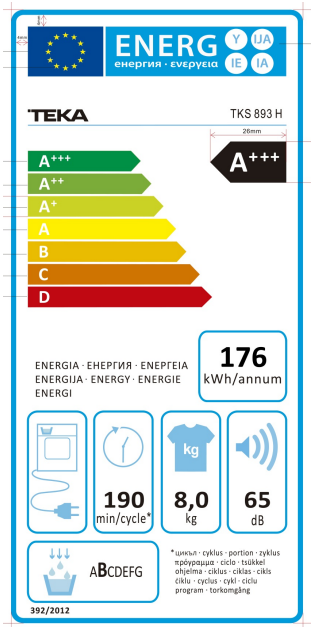
ENERGY LABEL