HLC 8471 S Compact Multifunction Oven in 45cm with HydroClean system and steamer

48L

SoftClose

DESCRIPTION	Compact Multifunction Oven in 45cm with HydroClean system and steamer
LIFE STYLE	Maestro
COLOURS	
REFERENCE	REF. 111230002 EAN. 8434778003567

HLC 8471 S

FEATURES

Multifunction SurroundTemp oven + Steamer
Temperature range 35-100 ºC
1 litre water tank
Touch control display with knobs
Electronic timer (Delay/Start function)
Sterilization and regeneration function
Chrome supports with 5 cooking levels
Removable triple glazed door
SoftClose system
Automatic disconnection security system
Children safety lock
Anti-tip deep tray,anti-tip gastronorm tray, reinforced grid and special grid for perforated tray
Capacity (gross/net): 49 / 48 litres

HLC 8471 S

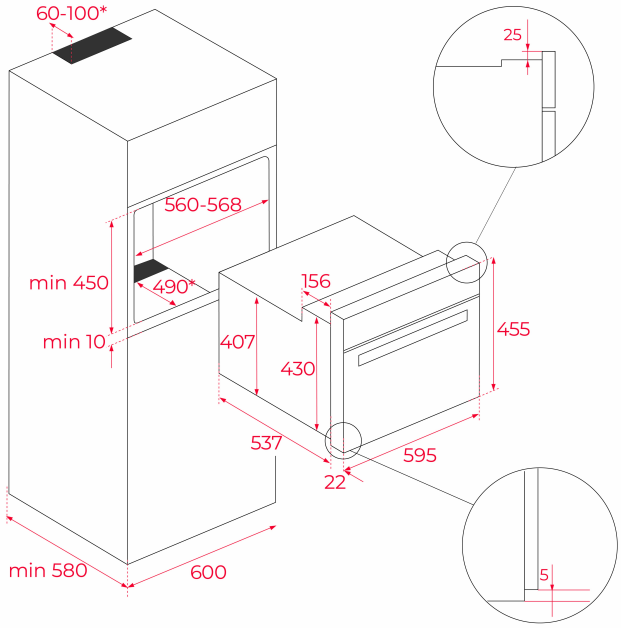

DIMENSIONS

Product height (mm): 455
Product width (mm): 595
Product depth (mm): 559
Product length (mm):
Net weight (Kg): 26,5

TECHNICAL DETAILS

FEATURES

Certificates: CE/CB / CCC
Type of inner light: Halogen
Inside light position: upper rear right
Enamelled cavity: Yes
Min. Temperature Regulator (ºC): 30
Max. Temperature Regulator (ºC): 100
Function selector: ELECTRONIC
Number of cooking functions: 1
Bottom function: Yes
Knobs type: MMX FIX KNOB
Ring illuminated: Yes
Removable chromed tray guides: Yes
Number of guide levels: 4
Number of guide levels (lower cavity): 0
Forced refrigeration tangential 1 speed: Yes
SoftClose: Yes

ELECTRIC CONNECTION

Maximum Nominal Power (W): 3000
Frequency (Hz): 50/60
Power rate (V): 220-240

Cable Connection Length (cm): 110
Plug: Yes
Inside light Consumption (W): 25

ENERGY CONSUMPTION

Bottom Heating Element (W): 1150
Cooling Fan Motor (W): 35

SAFETY SYSTEMS

Automatic disconnection when opening the door: Yes
Panel blocking system: Yes
Children safety block option: Yes
Anti-tip tray system: Yes
Safety Thermostat: Yes

CLEANING SYSTEM

Fingerprint proof stainless steel: Yes
Crystal Clean Enamel (Slippery): Yes

ACCESSORIES

Deep Tray (50 mm): 1
Reinforced grid: 1