DVN 74030 TTC WH 70cm Vertical Decorative Hood with Touch control and Rim Extraction

LED

Stop Delay Timer

DESCRIPTION	70cm Vertical Decorative Hood with Touch control and Rim Extraction
LIFE STYLE	Easy
COLOURS	
REFERENCE	REF. 112950007 EAN. 8434778010794

DVN 74030 TTC WH

FEATURES

Urban Colors Edition
Decorative vertical hood
Touch control
Rim extraction
2 speeds + 1 intensive
Free Outlet exhaust capacity (m3/h):460
Intensive speed exhaust capacity (m3/h): 425
Max speed exhaust capacity (m3/h): 410
Min speed exhaust capacity (m3/h): 380
Intensive speed sound level (dBA): 72
Max speed sound level (dBA): 66
Min speed sound level (dBA): 65
2 LED lamps
1 Aluminum Filter
Stop delay timer
Anti-return valve included
Outlet reduction included
Optional recirculation kit with tube cover installation: SET D13CTP
Optional Charcoal Filter: D9C

DVN 74030 TTC WH

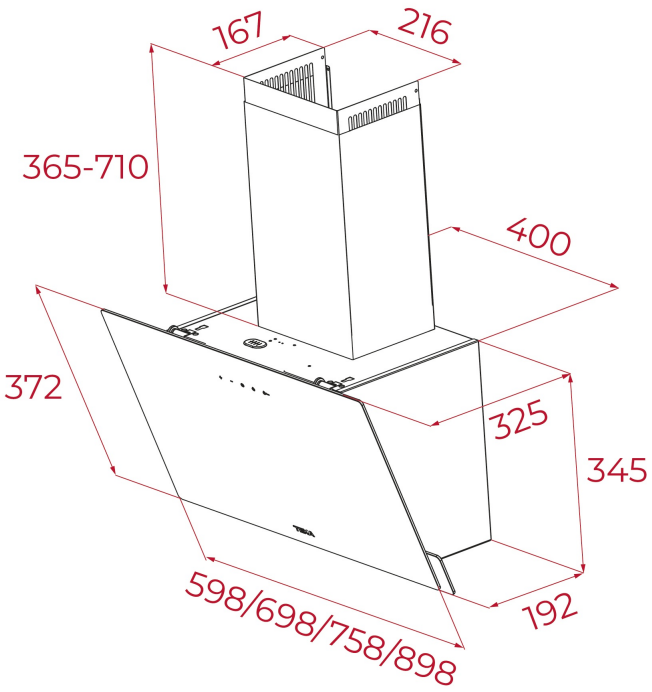

DIMENSIONS

Product height (mm): 690-1035
Product width (mm): 698
Product depth (mm): 325
Product length (mm):
Net weight (Kg): 9,02

TECHNICAL DETAILS

FEATURES

Certificates: CE; CB; EMC
Ø Outlet (mm): 150
Type of inner light: LED
Inside light Consumption (W): 1
Plug type: schuko
Cable Connection Length (cm): 160
Power rate (V): 220-240
Frequency (Hz): 50/60
Total hood power (W): 142
Number of motors: 2
Motor power (W): 140
Air flow (Qmin) m3/h: 380
Air flow (Qmax): 410
Air flow (Qboost): 425

ACCESSORIES

Anti Return valve: Yes
Outlet extension: no
Optional Charcoal Filter: D9C
Conventional recirculation kit (opt) - w/tube cover: SET D13CTP

MODELS	**Number of filters:** 1 **Filter description:** Aluminum Filters **Opening system:** Panel Uphold Hinge **Control panel:** Touch Control **Stop delay timer:** Yes **Number of speeds:** 2+1

DVN 74030 TTC WH
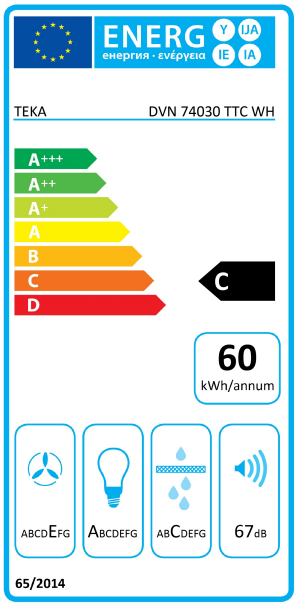
ENERGY LABEL