JZC 64322 AB Gas on glass + Induction hob with Direct Functions and 4 cooking zones in 60cm

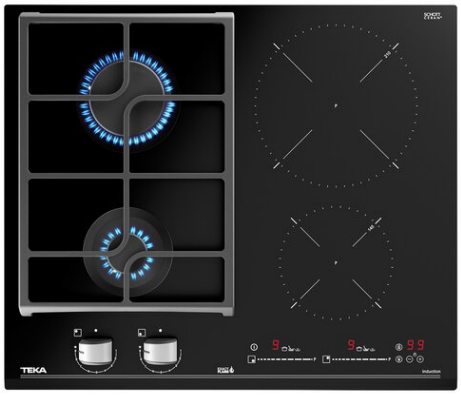

MultiSlider | Auto ignition | Autolock | ExactFlame | Power | Power Plus | Easy installation

DESCRIPTION	Gas on glass + Induction hob with Direct Functions and 4 cooking zones in 60cm
LIFE STYLE	Total
COLOURS	
REFERENCE	REF. 112570113 EAN. 8434778011241

JZC 64322 AB

FEATURES

Urban Colors Edition
Gas on glass + Induction hob
ExactFlame
Direct functions: Simmering, melting and keep warm
Frontal control knobs + Touch Control MultiSlider
4 cooking zones
1 fast burner, 2.8 kW
1 auxiliary burner, 1 kW
1 zone Ø 210 mm
1 zone Ø 145 mm
Ceramic glass surface
Auto ignition
Auto-lock safety system
Cast iron grids
Indution:
Cooking timer
Power plus
Child lock
Residual heat indicator
Power management
Easy installation kit
Maximum nominal power(Gas) 3800 W
Maximum nominal power(Induction) 3500 W
Optional: Wok support
Silver knobs accessory available

JZC 64322 AB

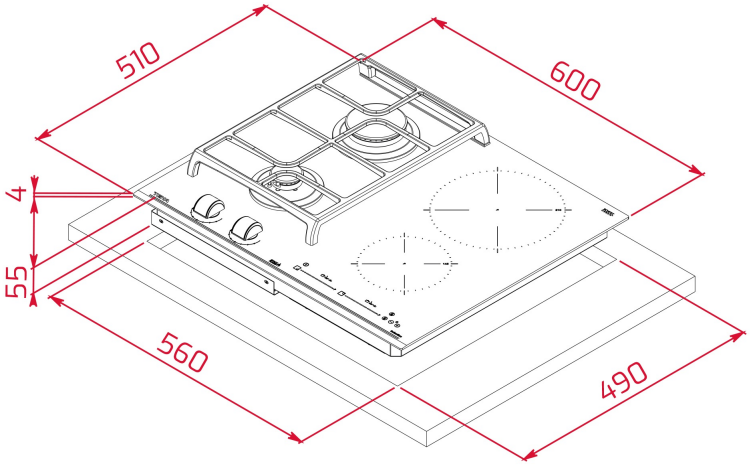

DIMENSIONS

Product height (mm): 98
Product width (mm): 600
Product depth (mm): 510
Product length (mm):
Net weight (Kg): 12,8

TECHNICAL DETAILS

FITTING MEASURES

Built-in Width (mm): 560
Built-in Depth (mm): 490
Built-in height (mm): 49

FEATURES

Gas type: Natural
Maximum nominal power (W) (Gas): 3800
Autoignition: Yes
Number of electric power levels: 9
Simmering: Yes
Melting: Yes
Keeping warm: Yes
Power management function: Yes

ELECTRIC CONNECTION

Maximum Nominal Power (W): 3500
Frequency (Hz): 50/60
Power rate (V): 220-240
Cable Connection Length (cm): 110
Maximum Nominal Power (W) (Electric hob): 3500

COOKING ZONES	**Cooking Zones:** 4 **Energy consumption for the whole hob, Wh/Kg:** 180,4
SAFETY SYSTEMS	**Automatic safety disconnection (Auto Lock) (Gas):** Yes **Residual heat indicator (Electric hob):** Yes **Automatic safety disconnection (Auto Lock) (Electric hob):** Yes **Child lock:** Yes
FINISH	**Surface finishing:** Front bevelled glass **Surface type:** Ceramic Glass (4mm) **Easy installation system:** Yes
ACCESSORIES	**Grid type:** Full Grid **Wok support:** NO **Junction Kit:** Optional **Cast Iron Grids:** Yes **Teppan Yaki:** No