DVT Pro 78660 TBS WH 70cm Vertical Decorative Hood in full glass design and FreshAir function

LED | Perimeter extraction | Stop Delay Timer | Fresh AIR

DESCRIPTION	70cm Vertical Decorative Hood in full glass design and FreshAir function
LIFE STYLE	Maestro
COLOURS	
REFERENCE	REF. 112930042 EAN. 8434778013245

DVT Pro 78660 TBS WH

FEATURES

Urban Colors Edition
Decorative vertical hood
Touch control with display
FreshAir function
3 speeds + 1 intensive
Intensive speed exhaust capacity (m3/h): 698
Max speed exhaust capacity (m3/h): 584
Min speed exhaust capacity (m3/h): 307
Intensive speed sound level (dBA): 74
Max speed sound level (dBA): 68
Min speed sound level (dBA): 52
2 LED lamps
2 Aluminum Filters
Stop delay timer
Filer saturation indicator
Anti-return valve included
Outlet reduction included
Optional recirculation kit with tube cover installation: CFH 15200 L2C
Optional regenerative recirculation kit with tube cover installation: RFH 15200 L2C
Optional recirculation kit without tube cover installation: RFH 15200 O2C
Optional Charcoal Filter: C1RTK
Optional Regenerative filter: R1RTK

DVT Pro 78660 TBS WH

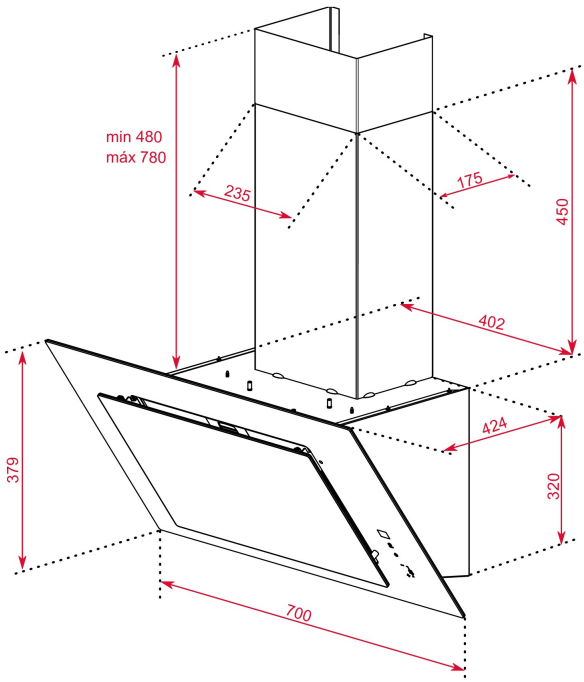

DIMENSIONS

Product height (mm): 800-1100
Product width (mm): 700
Product depth (mm): 412
Product length (mm):
Net weight (Kg): 15,3

TECHNICAL DETAILS

FEATURES

Ø Outlet (mm): 150
Removable oil collector: Yes
Dual Aspiration System: Yes
Type of inner light: LED
Inside light Consumption (W): 4,2
Plug type: Schuko plug
Cable Connection Length (cm): 100
Power rate (V): 220-240
Frequency (Hz): 50/60
Total hood power (W): 286
Number of motors: 1
Motor power (W): 280
Air flow (Qmin) m3/h: 307
Air flow (Qmax): 584
Air flow (Qboost): 698

ACCESSORIES

Anti Return valve: Yes
Outlet reduction: Yes
Outlet extension: No
Optional Charcoal Filter: C1RTK

Regenerative charcoal filter: R1RTK
Conventional recirculation kit (opt) - w/tube cover: CFH 15200 L2C
Regenerative recirculation kit (opt) - w/tube cover: RFH 15200 L2C
Conventional recirculation kit (opt) - w/o tube cover: CFH 15200 O2C
Regenerative recirculation kit (opt) - w/o tube cover: RFH 15200 O2C

MODELS

Number of filters: 2
Filter description: Aluminum Filters
Opening system: Piston
Control panel: Touch Control w/display
Stop delay timer: Yes
Filter saturation indicator: Yes
Number of speeds: 3 + 1
Fresh air function: Yes

DVT Pro 78660 TBS WH
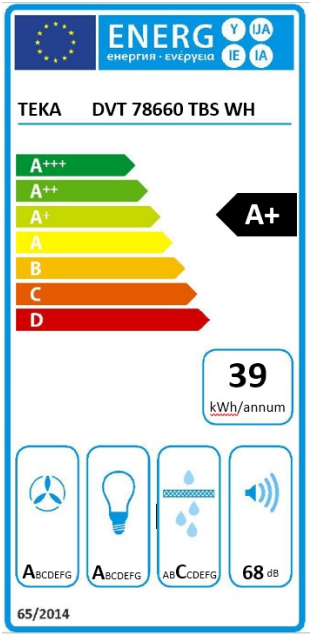
ENERGY LABEL