# **DFI 46950** Fully Integrated dishwasher with DualCare program and Extra Drying function

Beam On Floor | Eco Function | Third Cutlery Tray | Extra Dry function | Detergent detector system | Slidind Door | Water dirtiness sensor Aqualogic

| | |
|---|---|
| **DESCRIPTION** | Fully Integrated dishwasher with DualCare program and Extra Drying function |
| **LIFE STYLE** | Total |
| **COLOURS** | |
| **REFERENCE** | REF. 114270001<br>EAN. 8434778013535 |

# DFI 46950

**FEATURES**

Built-in Dishwasher
Electronic control panel with display
Capacity: 15 plate settings
Washing programs: 9
Washing temperatures: 35°, 40°, 45°, 50°, 65°, 70°C
Motor Inverter
SmartSensor measure the level of dirtiness
MultiCleaner Sensor
FlexiSet 4 lower basket
Fast programs: 30 minutes
Special programs: GlassCare, DualCare, AutoClean, AutoProgram, Intensive program, ECO program, 1-Hour, PreWash
Special functions: Half load, Express, PowerWash, ExtraDry
AquaStop and AquaSafe safety systems
Low salt and rinse indicator
Third sprayer
Beam on floor
Push-up adjustable upper basket
Delay timer: 1-24 hours
Noise level: 46 dBA
Adjustable back feet from front
Sliding Detergent drawer
SlidingDoor installation system
Column installation

# DFI 46950

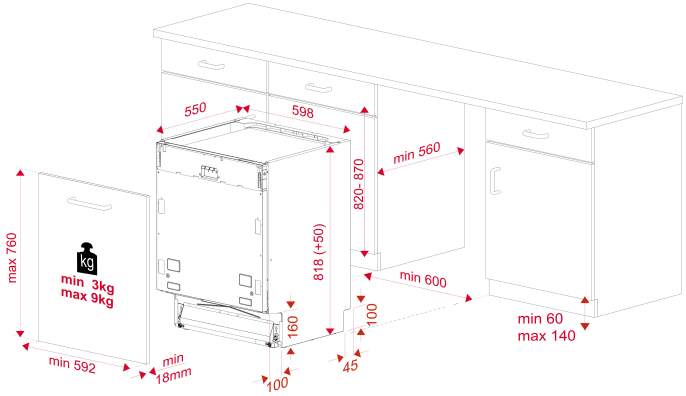


## DIMENSIONS

**Product height (mm):** 818
**Product width (mm):** 598
**Product depth (mm):** 550
**Product length (mm):**
**Net weight (Kg):** 38,4

## TECHNICAL DETAILS

| | |
|---|---|
| **FITTING MEASURES** | **Built-in niche height (cm):** 82-87 cm |
| **PRODUCT SHEET** | **Capacity (Place Settings):** 15<br>**Energy consumption (kWh/year):** 270<br>**Power consumption (Kwh):** 0.94<br>**Water consumption (litres/year):** 2660<br>**Water consumption (litres):** 9.5<br>**Standard program:** Eco 50<br>**Standard cycle duration (minutes):** 245<br>**Noise level (dB):** 46<br>**Certificates:** CB; CE |
| **POWER SUPPLY** | **Frequency (Hz):** 50<br>**Power rate (V):** 220-240<br>**Plug type:** EU<br>**Cable Connection Length (cm):** 170<br>**Maximum Nominal Power (W):** 2100<br>**Power of heating element (W):** 1800 |

| | |
|---|---|
| **FEATURES** | **Type of installation:** Built-in<br>**Control panel:** Electronic buttons<br>**Control panel display:** Yes<br>**Number of programs:** 9<br>**Number Of Washing Temperatures:** 6<br>**Beam on floor:** Yes<br>**Aqua-Logic:** Yes<br>**3 in 1 selector:** Yes<br>**Water softener:** Yes<br>**Microfilter:** Yes<br>**Installation in column:** Yes |
| **SAFETY SYSTEMS** | **Internal Leakage Control:** Yes<br>**Aquastop:** Yes |
| **CONTROL INDICATOR LIGHTS** | **Low Salt Aid indicator:** Yes<br>**Low Rinse Aid indicator:** Yes<br>**Selected program indicator:** Yes<br>**Remaining time:** Yes |
| **SPECIAL FUNCTIONS** | **Soak/Prewash program:** Yes<br>**Fast program:** Yes<br>**Fast program (minutes):** 30<br>**1 Hour program:** Yes<br>**Economic program:** Yes<br>**Intense program:** Yes<br>**Half load:** Yes<br>**Delayed Timer (h):** 1-24 HOURS |
| **EQUIPMENT** | **3rd Basket:** Yes<br>**3rd sprayer:** Yes<br>**Adjustable back feet from front:** Yes |

# DFI 46950
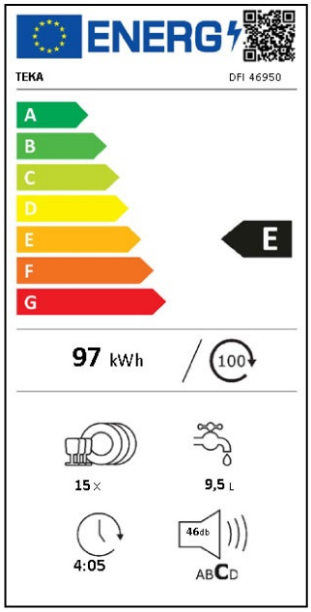
**ENERGY LABEL**