DFI 46950 XL Fully Integrated dishwasher with DualCare program and Extra Drying function

Beam On Floor | Eco Function | Third Cutlery Tray | Extra Dry function | Detergent detector system | Slidind Door | Water dirtiness sensor Aqualogic

DESCRIPTION	Fully Integrated dishwasher with DualCare program and Extra Drying function
LIFE STYLE	Total
COLOURS	
REFERENCE	REF. 114270002 EAN. 8434778013542

DFI 46950 XL

FEATURES

Built-in Dishwasher
Electronic control panel with display
Capacity: 15 plate settings
Washing programs: 9
Washing temperatures: 35°, 40°, 45°, 50°, 65°, 70°C
Motor Inverter
SmartSensor measure the level of dirtiness
MultiCleaner Sensor
FlexiSet 4 lower basket
Fast programs: 30 minutes
Special programs: GlassCare, DualCare, AutoClean, AutoProgram, Intensive program, ECO program, 1-Hour, PreWash
Special functions: Half load, Express, PowerWash, ExtraDry
AquaStop and AquaSafe safety systems
Low salt and rinse indicator
Third sprayer
Beam on floor
Push-up adjustable upper basket
Delay timer: 1-24 hours
Noise level: 46 dBA
Adjustable back feet from front
Sliding Detergent drawer
SlidingDoor installation system
Column installation

DFI 46950 XL

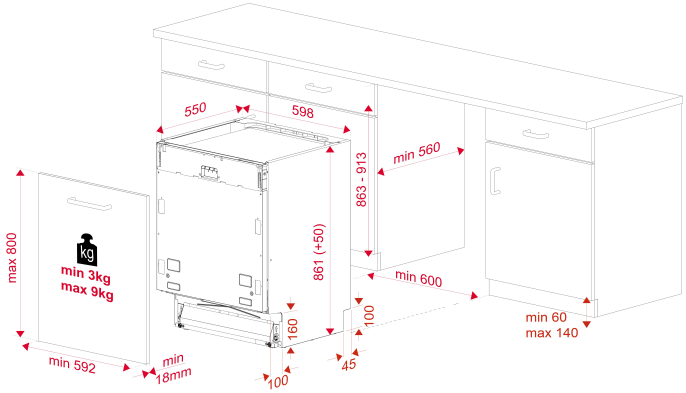

DIMENSIONS

Product height (mm): 861
Product width (mm): 598
Product depth (mm): 550
Product length (mm):
Net weight (Kg): 39,2

TECHNICAL DETAILS

FITTING MEASURES	**Built-in niche height (cm):** 86-91 cm
PRODUCT SHEET	**Capacity (Place Settings):** 15 **Energy consumption (kWh/year):** 270 **Power consumption (Kwh):** 0.94 **Water consumption (litres/year):** 2660 **Water consumption (litres):** 9.5 **Standard program:** Eco 50 **Standard cycle duration (minutes):** 245 **Noise level (dB):** 46 **Certificates:** CB; CE
POWER SUPPLY	**Frequency (Hz):** 50 **Power rate (V):** 220-240 **Plug type:** EU **Cable Connection Length (cm):** 170 **Maximum Nominal Power (W):** 2100 **Power of heating element (W):** 1800

FEATURES	**Type of installation:** Built-in **Control panel:** Electronic buttons **Control panel display:** Yes **Number of programs:** 9 **Number Of Washing Temperatures:** 6 **Beam on floor:** Yes **Aqua-Logic:** Yes **3 in 1 selector:** Yes **Water softener:** Yes **Microfilter:** Yes **Installation in column:** Yes
SAFETY SYSTEMS	**Internal Leakage Control:** Yes **Aquastop:** Yes
CONTROL INDICATOR LIGHTS	**Low Salt Aid indicator:** Yes **Low Rinse Aid indicator:** Yes **Selected program indicator:** Yes **Remaining time:** Yes
SPECIAL FUNCTIONS	**Soak/Prewash program:** Yes **Fast program:** Yes **Fast program (minutes):** 30 **1 Hour program:** Yes **Economic program:** Yes **Intense program:** Yes **Half load:** Yes **Delayed Timer (h):** 1-24 HOURS
EQUIPMENT	**3rd Basket:** Yes **3rd sprayer:** Yes **Adjustable back feet from front:** Yes

DFI 46950 XL
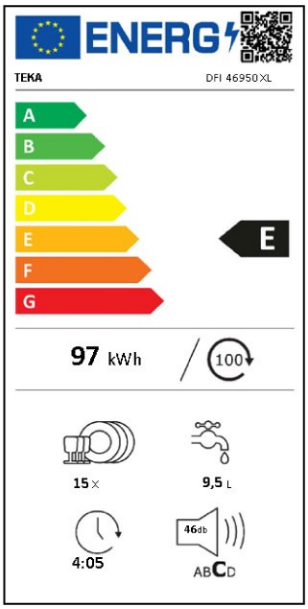
ENERGY LABEL