SCT 70810 WH ExpertCare Series Dryer with 15 drying programs and 8kg capacity

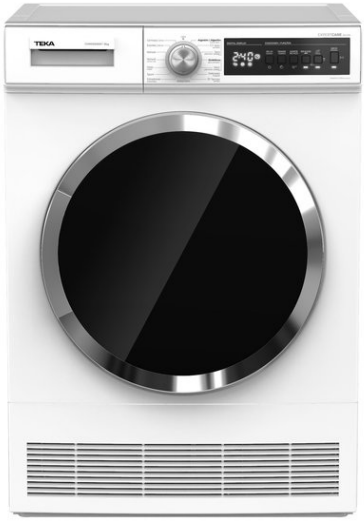

Quick Cycle

Washing capacity: 8Kg

DESCRIPTION	ExpertCare Series Dryer with 15 drying programs and 8kg capacity
LIFE STYLE	Maestro
COLOURS	
REFERENCE	REF. 114060002 EAN. 8434778016659

SCT 70810 WH

FEATURES

PremiumCare series
Free Standing Dryer
Condensed drying technology
ExcellentDry sensor
Electronic control panel with display
Drying capacity: 8 kg
Drying programs: 15
Fast program: 12/29 minutes
Special programs: ECO mode, Wool care, Delicate, Sport, Baby Care, Refresh, Express
Express: 29 minutes
Shirts: 12 minutes
Special functions: Delay timer, Easy ironing, Delicate, Drying level, Time Dry
Child lock
SoftCare drum
Delay timer: 1-23 hours
47 cm wide porthole door
Reversible door

SCT 70810 WH

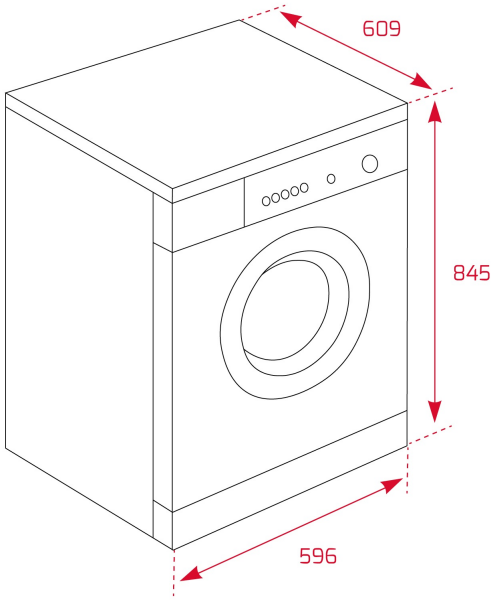

DIMENSIONS

Product height (mm): 845
Product width (mm): 596
Product depth (mm): 609
Product length (mm):
Net weight (Kg): 38,9

TECHNICAL DETAILS

PRODUCT SHEET

Type of installation: Free Standing
Drying capacity (Kgs): 8
Condensation efficiency: B
Energy consumption per drying cycle (Full load) (kWh): 4.68
Energy consumption (kWh/year): 561
Duration of drying cycle (Full load) (minutes): 99
Automatic (sensor drying): Yes

POWER SUPPLY

Frequency (Hz): 50
Power rate (V): 220-240
Maximum Nominal Power (W): 2700
Nominal power motor (W): 200

FEATURES

Glass door diameter (cms): 47
Number of programs: 15
Control panel: Electronic
Child lock: Yes
Cancel spin cycle button: Yes
Bidirectional rotation: Yes

Reversible door: Yes
Drum light: Yes
Drum: Stainless Steel

CONTROL INDICATOR LIGHTS

Selected program indicator: Yes
Remaining time: Yes
Drying: Yes
Dryer timer: Yes
Full water tank indicator: Yes

SPECIAL FUNCTIONS

Fast program: Yes
Fast program (minutes): 12 min / 29 min
Economic program: Yes
Delayed Timer (h): 1-23
Delicate fabrics: Yes
Resistant: Yes
Easy ironing/anti crease: Yes

EQUIPMENT

Adjustable Feet Back: Yes
Adjustable feet front: Yes

SCT 70810 WH
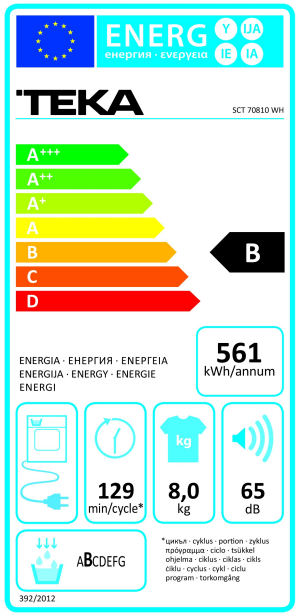
ENERGY LABEL