DFS 46750 WH ExpertCare Series semi freestanding dishwasher with 14 place settings and 7 washing programs

Eco Function

AutoDoor opening system

AquaLogic

DESCRIPTION	ExpertCare Series semi freestanding dishwasher with 14 place settings and 7 washing programs
COLOURS	
REFERENCE	REF. 114210000 EAN. 8434778017397

DFS 46750 WH

FEATURES

ExpertCare series
Free standing Dishwasher
Electronic control panel with display
Capacity: 14 plate settings
Washing programs: 7
Washing temperatures: 50°, 55°, 60°, 65°, 70°C
PremiumDry automatic opening system
SmartSensor measure the level of dirtiness
FlexiSet 2 lower basket
Special programs: AutoClean, AutoProgram, Intensive program, ECO program, 1-Hour, Whisper program, PreWash
Special functions: Half load, Express, ExtraDry
AquaSafe safety system
Low salt and rinse indicator
Adjustable upper basket
Delay timer: 1-24 hours
Noise level: 46 dBA
Sliding Detergent drawer
Column installation

DFS 46750 WH

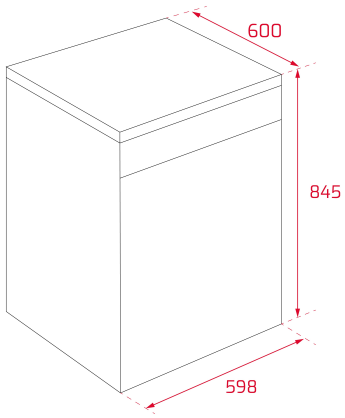

DIMENSIONS

Product height (mm): 845
Product width (mm): 598
Product depth (mm): 600
Product length (mm):
Net weight (Kg): 45,5

TECHNICAL DETAILS

PRODUCT SHEET

Capacity (Place Settings): 14
Energy consumption (kWh/year): 237
Power consumption (Kwh): 0,83
Water consumption (litres/year): 3080
Water consumption (litres): 11
Standard program: ECO
Standard cycle duration (minutes): 198
Noise level (dB): 46
Certificates: GS;CE;EMC;LVD;CB

POWER SUPPLY

Frequency (Hz): 50
Power rate (V): 220
Plug type: EU
Cable Connection Length (cm): 150
Maximum Nominal Power (W): 2100
Power of heating element (W): 1800
Water outlet hose length (m): 1.38
Water inlet hose length (m): 1.5

FEATURES	**Type of installation:** Free standing **Control panel:** Electronic buttons **Control panel display:** Yes **Number of programs:** 7 **Number Of Washing Temperatures:** 5 **Aqua-Logic:** Yes **Water softener:** Yes **Microfilter:** Yes **Installation in column:** Yes
SAFETY SYSTEMS	**Internal Leakage Control:** Yes **Child lock:** Yes
CONTROL INDICATOR LIGHTS	**Low Salt Aid indicator:** Yes **Low Rinse Aid indicator:** Yes **Selected program indicator:** Yes **Remaining time:** Yes **Auto door opening indicator:** Yes **End of program acoustic alarm:** Yes **End of program visual alarm:** Yes
SPECIAL FUNCTIONS	**Soak/Prewash program:** Yes **1 Hour program:** Yes **Economic program:** Yes **Intense program:** Yes **Half load:** Yes **Delayed Timer (h):** 1-24 HOURS

DFS 46750 WH
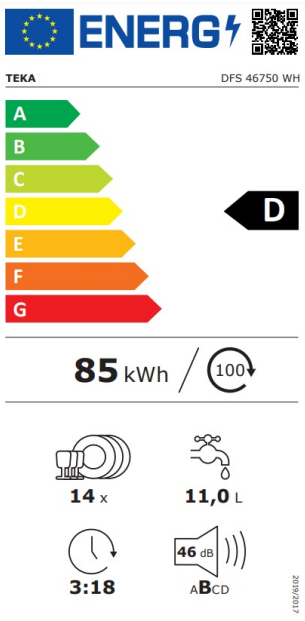
ENERGY LABEL