IZF 94300 MSP 91 cm induction Flex hob with TouchControl MultiSlider and 4 cooking zones

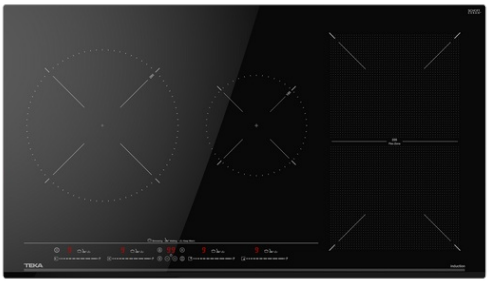

MultiSlider | Autolock | Power | Power Plus | Easy installation | Flex

DESCRIPTION	91 cm induction Flex hob with TouchControl MultiSlider and 4 cooking zones
LIFE STYLE	Total
COLOURS	
REFERENCE	REF. 112510024 EAN. 8434778012033

IZF 94300 MSP

FEATURES

Urban Colors Edition
Flex Induction hob
Direct functions: Simmering, melting and keep warm
Touch Control MultiSlider
4 cooking zones
1 zone Ø 280 mm
2 zones Ø 235 x 188,5 mm
1 zone Ø 185 mm
Ceramic glass surface
Auto-lock safety system
Cooking timer
Power plus
Child lock
Residual heat indicator
Power management
Easy installation kit
Maximum nominal power 7200 W
Optional: Grilling plate
Optional: Teppanyaki

IZF 94300 MSP

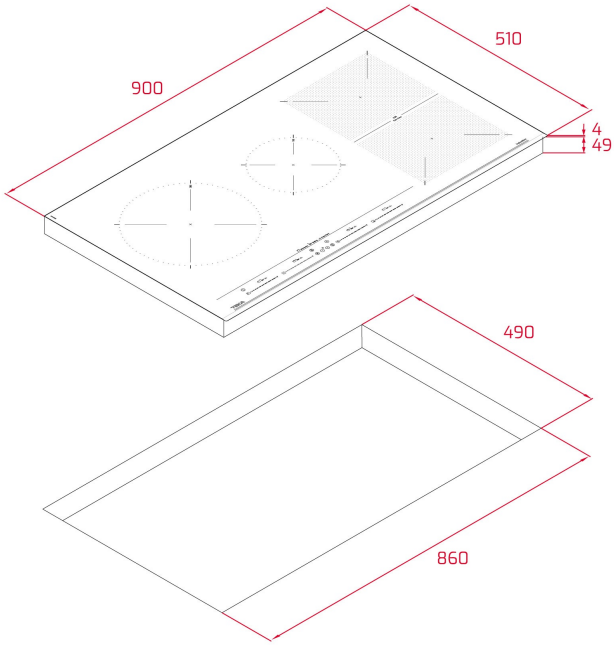

DIMENSIONS

Product height (mm): 53
Product width (mm): 900
Product depth (mm): 510
Product length (mm):
Net weight (Kg): 12,78

TECHNICAL DETAILS

FITTING MEASURES	**Built-in Width (mm):** 860 **Built-in Depth (mm):** 490 **Built-in height (mm):** 49
FEATURES	**Number of electric power levels:** 9 **Simmering:** Yes **Melting:** Yes **Keeping warm:** Yes **Power management function:** Yes
ELECTRIC CONNECTION	**Frequency (Hz):** 50/60 **Power rate (V):** 220-240 **Cable Connection Length (cm):** 110 **Maximum Nominal Power (W) (Electric hob):** 7200
COOKING ZONES	**Cooking Zones:** 4

SAFETY SYSTEMS	**Residual heat indicator (Electric hob):** Yes **Automatic safety disconnection (Auto Lock) (Electric hob):** Yes **Child lock:** Yes
FINISH	**Surface finishing:** Front bevelled glass **Surface type:** Ceramic Glass (4mm) **Easy installation system:** Yes
ACCESSORIES	**Junction Kit:** NO **Teppan Yaki:** Optional