EFX 60.1 2G 2H AI AL Mixed Hob with frontal control knobs of butane and natural gas in 60 cm

Auto ignition | Autolock | Easy installation

DESCRIPTION	Mixed Hob with frontal control knobs of butane and natural gas in 60 cm
LIFE STYLE	Total
COLOURS	
REFERENCE	REF. 112610036 EAN. 8434778018967

EFX 60.1 2G 2H AI AL

FEATURES

Gas + Vitroceramic hob
Frontal control knobs
4 cooking zones
1 high lights Ø 180 mm
1 high lights Ø 140 mm
1 burner, 1.8 kW
1 burner, 1.2 kW
Stainless steel surface
Auto ignition
Auto-lock safety system
Cast iron grids
Easy installation kit
Maximum nominal power 4000 W

EFX 60.1 2G 2H AI AL

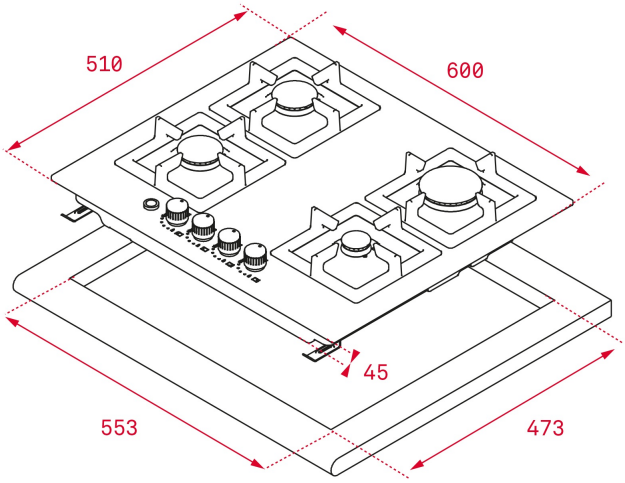

DIMENSIONS

Product height (mm): 91
Product width (mm): 600
Product depth (mm): 510
Product length (mm):
Net weight (Kg): 8,5

TECHNICAL DETAILS

FITTING MEASURES	**Built-in Width (mm):** 553 **Built-in Depth (mm):** 473 **Built-in height (mm):** 45
FEATURES	**Gas type:** Natural&Butane **Maximum nominal power (W) (Gas):** 4000 **Autoignition:** Yes **Number of electric power levels:** 12
ELECTRIC CONNECTION	**Maximum Nominal Power (W):** 3000 **Frequency (Hz):** 50/60 **Power rate (V):** 220-240 **Cable Connection Length (cm):** 110
COOKING ZONES	**Cooking Zones:** 4

SAFETY SYSTEMS	**Automatic safety disconnection (Auto Lock) (Gas):** Yes **Automatic safety disconnection (Auto Lock) (Electric hob):** Yes
FINISH	**Surface finishing:** Brushed stainless steel **Surface type:** Stainless Steel **Easy installation system:** Yes
ACCESSORIES	**Grid type:** Conected Grid **Wok support:** no **Junction Kit:** NO **Cast Iron Grids:** Yes **Teppan Yaki:** NO