# **IN 912** Single Lever Kitchen Tap with high spout and anti-scale areator

Anti-Scale Aerator

Swivel Spout

| | |
|---|---|
| **DESCRIPTION** | Single Lever Kitchen Tap with high spout and anti-scale areator |
| **LIFE STYLE** | Easy |
| **COLOURS** | |
| **REFERENCE** | REF. 5391212<br>EAN. 8421152093160 |

# IN 912

**FEATURES**

High spout kitchen tap
Swivel spout
Anti-scale aerator
Cartridge with ceramic discs of high resistance
Highly precise temperature control
Greater handling sensitivity with smoother movements
3/8" flexible inlet pipes

TEKA

# IN 912

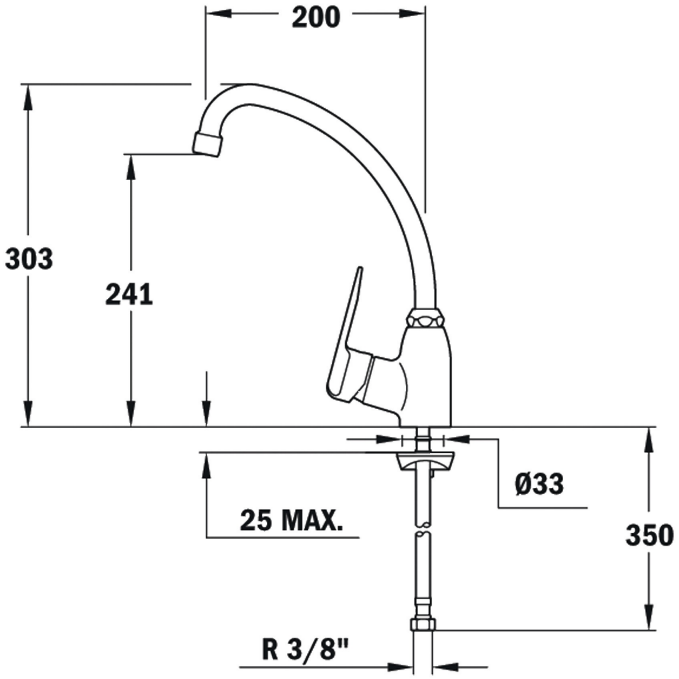


## DIMENSIONS

**Product height (mm):** 303
**Product width (mm):**
**Product depth (mm):**
**Product length (mm):**
**Net weight (Kg):** 1,4

## TECHNICAL DETAILS

| | |
|---|---|
| **MODELS** | **Type of installation:** Free standing |