EFX 30.1 FRYER Modular Fryer in 30 cm

DESCRIPTION	Modular Fryer in 30 cm
LIFE STYLE	Total
COLOURS	
REFERENCE	REF. 40214451 EAN. 8421152156629

EFX 30.1 FRYER

FEATURES

Modular hob
Fryer
Stainless steel surface
Metallic looking frontal knob
Overheating cut-off system
Thermostat for a constant oil temperature control
2 electric resistance
Max.nominal power: 2300 W

EFX 30.1 FRYER

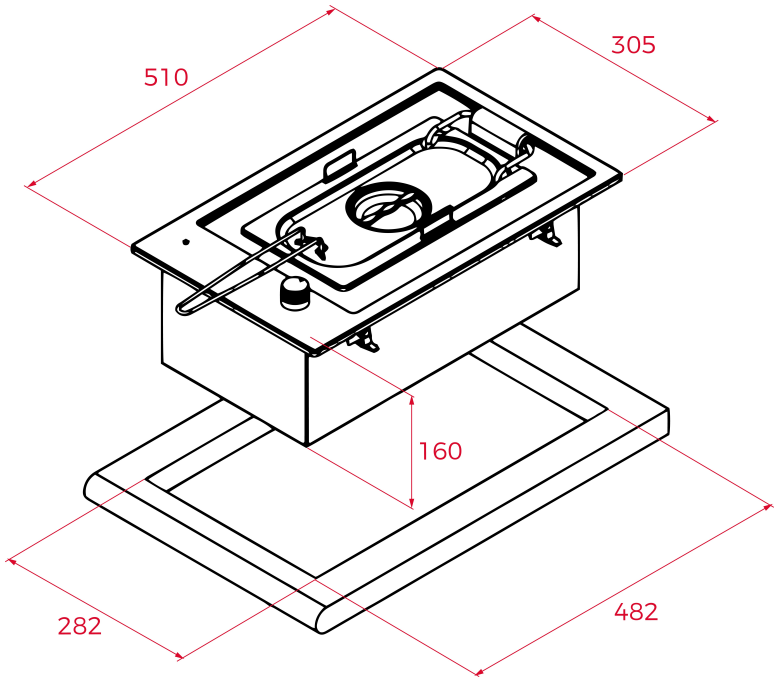

DIMENSIONS

Product height (mm):
Product width (mm): 305
Product depth (mm): 510
Product length (mm):
Net weight (Kg): 7,2

TECHNICAL DETAILS

FITTING MEASURES	**Built-in Depth (mm):** 482 **Built-in height (mm):** 160
ELECTRIC CONNECTION	**Maximum Nominal Power (W):** 2300 **Frequency (Hz):** 50/60 **Cable Connection Length (cm):** 135
COOKING ZONES	**Cooking Zones:** 2