Starbright 45 E-XN 1B 1D Inset reversible sink with matt finish in 45 cm

Lifetime warranty

Hygiene

DESCRIPTION	Inset reversible sink with matt finish in 45 cm
LIFE STYLE	Easy
COLOURS	
REFERENCE	REF. 115120037 EAN. 8434778015812

Starbright 45 E-XN 1B 1D

FEATURES

Stainless steel sink, Matt finish
One bowl and one drainer, reversible
Inset installation
3½" manual basket waste and siphon
160 mm deep bowl
45 cm base unit

Starbright 45 E-XN 1B 1D

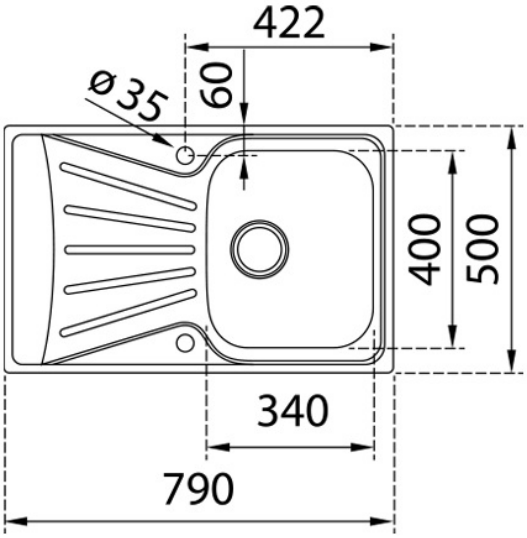

DIMENSIONS

Product height (mm):
Product width (mm): 500
Product depth (mm):
Product length (mm): 790
Net weight (Kg): 2,78

TECHNICAL DETAILS

MAIN BOWL	**Main Bowl Length (mm):** 340 **Main Bowl Width (mm):** 400 **Main Bowl Depth (mm):** 160
OTHER FEATURES	**Material:** Stainless Steel **Type of installation:** Inset **Valve hole type:** 3½" **Overflow hole:** Round **Sink Bowl / Top thickness (mm):** 0,6
OTHERS	**Base unit (cm):** 45
SINK LAY OUT	**Number of bowls:** 1 **Number of drainers:** 1 **Drainer position:** Reversible
ACCESSORIES	**Soundproof:** Yes **Installation clips:** Yes **Siphon:** Yes