CG.1 60 4G AI AL

Polyvalent gas hob with 4 burners and auto-ignition of butane gas

Auto ignition

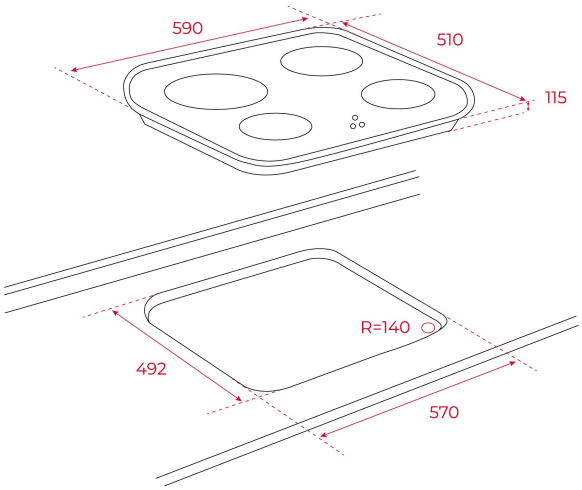

REFERENCE

REF: 10205083 EAN: 8421152066492

FEATURES

Polyvalent gas on glass hob
Frontal control knobs
4 cooking zones
1 fast burner, 3.00 kW
2 semi fast burners, 1.7 kW
1 auxiliary burner, 1 kW
Tempered glass surface
Auto ignition
Auto-lock safety system
Cast iron grids
Maximum nominal power 7500 W

DIMENSIONS

Product height (mm): 115
Product width (mm): 590
Product depth (mm): 510
Product length (mm):
Net weight (Kg): 10,5

TECHNICAL DETAILS

Power rate (V): -
Frequency (Hz): -
Maximum Nominal Power (W): -

COLOURS

10205083 Black glass

ENERGY EFFICIENCY

Power consumption in standby mode (W): -
Time to reach standby mode (min): -