MAESTRO **IZC 63632 SM MST**

Induction hob with Direct Functions MultiSlider and 3 cooking zones in 60 cm

MultiSlider Autolock Power Power Plus Easy installation

Super Zone

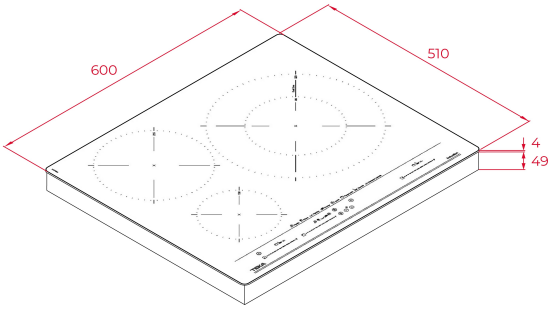

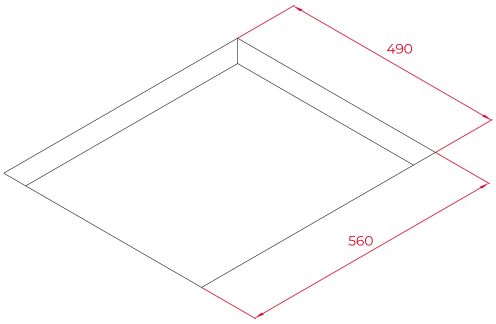

REFERENCE

REF: 112500014 EAN: 8434778011548

FEATURES

Urban Colors Edition
MasterSense Series
Induction hob
Direct functions with temperature sensors: Poaching, pan frying, quick boiling, simmering and keep warm
Touch Control MultiSlider
3 cooking zones
1 zone Ø 320/180 mm
1 zone Ø 215 mm
1 zone Ø 150 mm
Ceramic glass surface
Auto-lock safety system
Cooking timer
Power plus
Child lock
Residual heat indicator
Power management
Easy installation kit
Maximum nominal power 7200 W
Optional: Grilling plate
Optional: Teppanyaki

DIMENSIONS

Product height (mm): 53
Product width (mm): 600
Product depth (mm): 510
Product length (mm):
Net weight (Kg): 10,7

TECHNICAL DETAILS

Power rate (V): 220-240
Frequency (Hz): 50/60
Maximum Nominal Power (W): -

COLOURS

112500014	Steam Grey Glass
112510011	Stone Grey Glass
112510011	London brick brown glass
112510011	White Glass
112510011	Black Glass