MAESTRO **TKD 1481 SS EXP**

8kg Free-standing Washing Machine with Woolmark certification

Quick Cycle

REFERENCE

REF: 113900008 EAN: 8434778017922

FEATURES

Free standing Washing Machine
Inverter motor
Electronic control panel with display
Washing capacity: 8 kg
16 washing programs
Fast program: 15 minutes
Special programs: ECO mode, Wool care, Delicate, Sport
Special functions: Delay timer, Speed wash, Extra rinse
SmartWash system
Maximum spinning speed: 1400 RPM
Automatic water regulation
Automatic door lock safety system
Child lock
SoftCare drum
Delay timer: 1-24 hours
32 cm wide porthole door

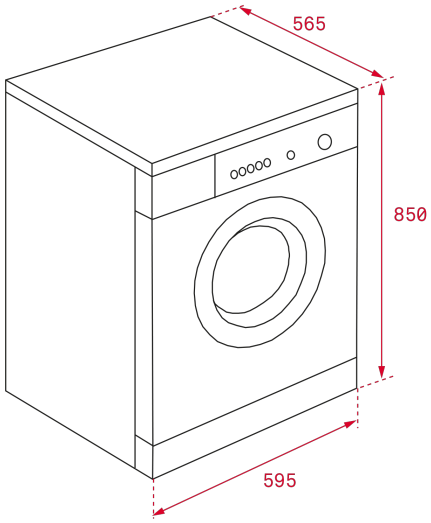

DIMENSIONS

Product height (mm): 850
Product width (mm): 595
Product depth (mm): 565
Product length (mm):
Net weight (Kg): 66

TECHNICAL DETAILS

Energy efficiency class (UE 2019/2016): B
Washing performance Class: -
Spinning efficiency class: B
Water consumption (litres/year): 11000
Noise Level (dBA): 57 + 79
Power rate (V): 220-240
Frequency (Hz): 50

COLOURS

113900008 Stainless Steel