IZS 97630 MST

MastersSense induction Flex hob with SlideCooking function and 5 cooking zones

MultiSlider Autolock Power Power Plus Easy installation

Super Zone

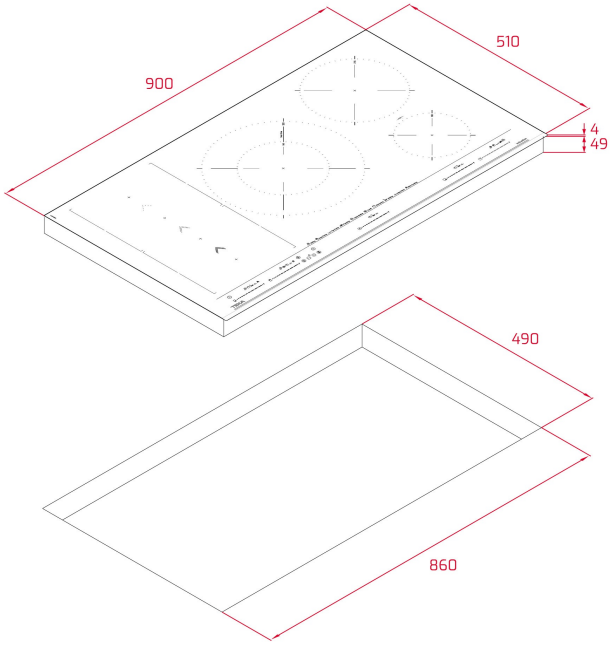

REFERENCE

REF: 112500034 EAN: 8434778012057

FEATURES

Urban Colors Edition
MasterSense Series
Flex Induction hob
SlideCooking function
Direct functions with temperature sensors: Confit, poaching, grilling, pan frying, deep frying, quick boiling, simmering, melting and keep warm
Touch Control MultiSlider
5 cooking zones
1 zone Ø 320/180 mm
2 zones Ø 228 x 200 mm
1 zone Ø 215 mm
1 zone Ø 150 mm
Ceramic glass surface
Auto-lock safety system
Cooking timer
Power plus
Child lock
Residual heat indicator
Power management
Easy installation kit
Maximum nominal power 10.800 W
Optional: Grilling plate
Optional: Teppanyaki

DIMENSIONS

Product height (mm): 53
Product width (mm): 900
Product depth (mm): 510
Product length (mm):
Net weight (Kg): 15,18

TECHNICAL DETAILS

Power rate (V): 220-240
Frequency (Hz): 50/60
Maximum Nominal Power (W): TBC

COLOURS

112500034 Black glass

ENERGY EFFICIENCY

Power consumption in standby mode (W): 0.4
Time to reach standby mode (min): 1