EASY **TK5 1060 EXP**

Free standing Washing Machine Washing capacity: 6 kg 15 washing programs

Quick Cycle

REFERENCE

REF: 113920008 EAN: 8434778017861

FEATURES

Free standing Washing Machine
Electronic control panel with display
Washing capacity: 6 kg
15 washing programs
Fast program: 15 minutes
Special programs: ECO mode, Wool care, Delicate, Sport
Special functions: Speed wash, Delay timer,
Extra rinse
SmartWash system
Maximum spinning speed: 1000 RPM
Automatic water regulation
Automatic door lock safety system
Child lock
SoftCare drum
Delay timer: 1-24 hours
32 cm wide porthole door

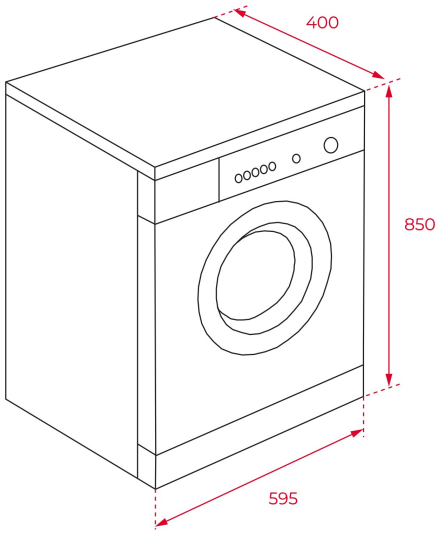

DIMENSIONS

Product height (mm): 850
Product width (mm): 595
Product depth (mm): 400
Product length (mm):
Net weight (Kg): 52

TECHNICAL DETAILS

Energy efficiency class (UE 2019/2016): E
Washing performance Class: -
Spinning efficiency class: B
Water consumption (litres/year): 9240
Noise Level (dBA): 64 + 79
Power rate (V): 220-240
Frequency (Hz): 50

COLOURS

113920008 White