Stylo 1B
Inset stainless steel sink with one bowl

Antibacterial Lifetime warranty

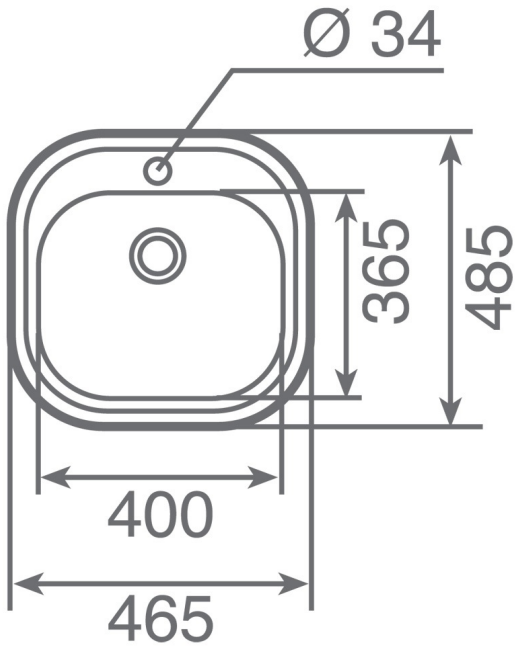

REFERENCE

REF: 10107074 EAN: 8421152130933

FEATURES

Stylo Series
Stainless steel sink
One bowl
Inset installation
3½" manual basket waste with siphon
165 mm deep bowl
45 cm base unit

DIMENSIONS

Product height (mm):
Product width (mm): 485
Product depth (mm): 165
Product length (mm): 465
Net weight (Kg): 1,82

COLOURS

10107074 Stainless steel