EASY **GO 914**

Two handles Kitchen Tap with swivel spout

Anti-Scale Aerator

Swivel Spout

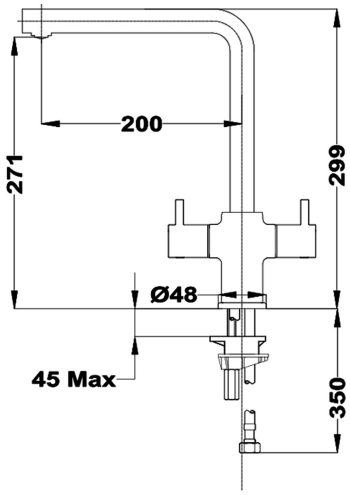

REFERENCE

REF: 116030018 EAN: 8434778003116

FEATURES

High spout kitchen tap
Swivel spout
Anti-scale aerator
Ceramic headparts
3/8" - 1/2" flexible inlet pipes

DIMENSIONS

Product height (mm): 299
Product width (mm):
Product depth (mm):
Product length (mm):
Net weight (Kg): 0,91

COLOURS

116030018 Chrome