MAESTRO **MaestroPizza HLC 8510 P**

MaestroPizza pyrolytic compact oven with special pizza function 340ºC

44L DualClean HydroClean Pyrolysis SoftClose

SurroundTemp

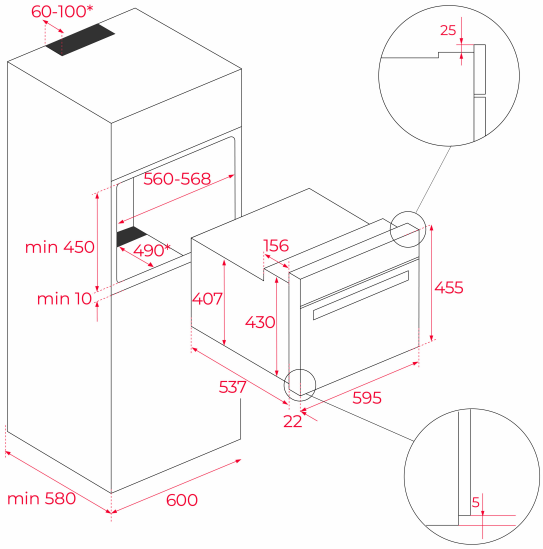

REFERENCE

REF: 111130010 EAN: 8434778026542

FEATURES

MaestroPizza oven
Multifunction SurroundTemp oven
8 cooking functions
Temperature range 50-340ºC
Pyrolysis self-cleaning system and automatic HydroClean PRO system
Touch control display with electronic timer
Chrome supports with 3 cooking levels
Removable quadruple glazed door
SoftClose system
Automatic disconnection security system
Children safety lock
Manual quick heating
Anti-tip deep tray and reinforced grid
Special pizza stone included
Capacity (gross/net): 45 / 44 litres

DIMENSIONS

Product height (mm): 455
Product width (mm): 595
Product depth (mm): 537+22
Product length (mm):
Net weight (Kg): 25

TECHNICAL DETAILS

Energy Efficiency Class: A+
Power rate (V): 220/240
Frequency (Hz): 50/60
Maximum Nominal Power (W): 3015

COLOURS

111130010 Black Glass