# NEO HSB 6360 FBK

Multifunction oven with 8 cooking functions, HydroClean system and push-pull knobs

70L

HydroClean steam cleaning system

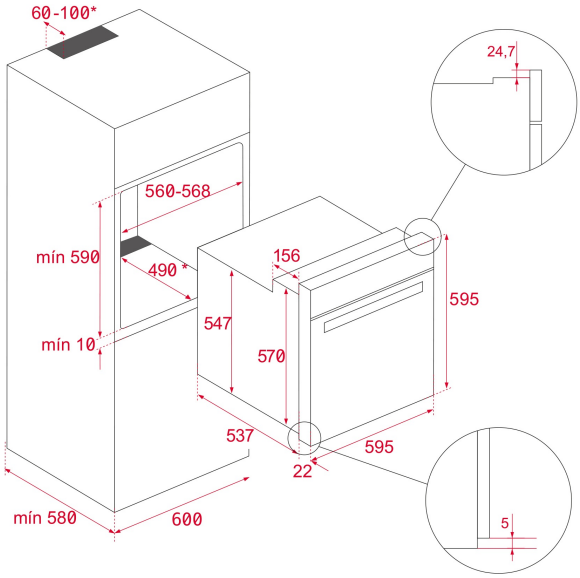


## REFERENCE

REF: 111010074 EAN: 8434778034035

## FEATURES

Neo Series
Multifunction oven
Chef functions for automatic programmes
ThermoSeal System for a stable temperature inside
Ultra-resistant BrightClean enamel
FastClick System for tray supports
Ergonomic and stylish handle
Wider LED display window
8 cooking functions
Automatic HydroClean system
Mechanical control with push-pull knobs
Electronic LED timer with touch control (Delay/Start function)
Chrome supports with 5 cooking levels
Plus Extension Telescopic guides
Removable double glazed door
Automatic disconnection security system
Manual quick preheating
Door square pattern
Flat Stainless-Steel panel
Anti-tip deep tray
Fingerprint proof stainless steel
Capacity (gross/net): 71 / 70 litres

## DIMENSIONS

**Product height (mm):** 595
**Product width (mm):** 595
**Product depth (mm):** 537+22
**Product length (mm):**
**Net weight (Kg):** 28,5

## TECHNICAL DETAILS

Energy Efficiency Class: A+
Power rate (V): 220/240
Frequency (Hz): 50/60
Maximum Nominal Power (W): 2615

## COLOURS

111010074 Black