CNL 6415 60cm Pull-out Hood with ECOPOWER motor and and 2+1 speeds

LED

Stop Delay Timer

DESCRIPTION	60cm Pull-out Hood with ECOPOWER motor and and 2+1 speeds
LIFE STYLE	Total
COLOURS	
REFERENCE	REF. 40436810 EAN. 8421152146170

CNL 6415

FEATURES

Pull-out hood
Electronic control
2 speeds + 1 intensive
Free Outlet exhaust capacity (m3/h): 393
Intensive speed exhaust capacity (m3/h): 385
Max speed exhaust capacity (m3/h): 312
Min speed exhaust capacity (m3/h): 226
Intensive speed sound level (dBA): 69
Max speed sound level (dBA): 64
Min speed sound level (dBA): 57
2 LED lamps
2 Stainless Steel filter
Stop delay timer
Fingerprint proof front panel
Exchangeable Front Panel
Anti-return valve included
Optional Charcoal Filter: CNL 1C

CNL 6415

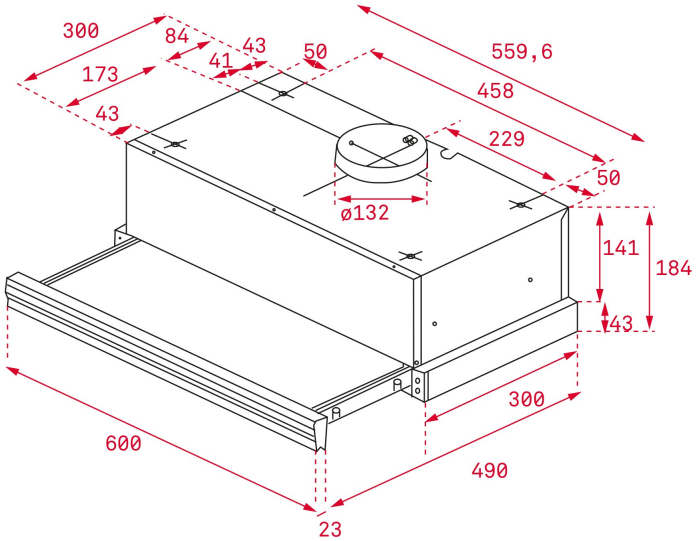

DIMENSIONS

Product height (mm): 184
Product width (mm): 600
Product depth (mm): 300/490
Product length (mm):
Net weight (Kg): 7,1

TECHNICAL DETAILS

FEATURES

Certificates: CE; CB; Rohs
Ø Outlet (mm): 120
Type of inner light: LED
Inside light Consumption (W): 1,5
Plug type: European plug
Power rate (V): 230
Frequency (Hz): 50
Total hood power (W): 113
Number of motors: 1
Motor power (W): 110
Air flow (Qmin) m3/h: 226
Air flow (Qmax): 312
Air flow (Qboost): 385

ACCESSORIES

Anti Return valve: Yes
Outlet extension: No
Optional Charcoal Filter: CNL 1C

MODELS

Number of filters: 2

Filter description: Stainless Steel filters
Control panel: Electronic
Stop delay timer: Yes
Automatic lighting: Yes
Number of speeds: 2+1
Fingerprint proof front panel: Yes

CNL 6415
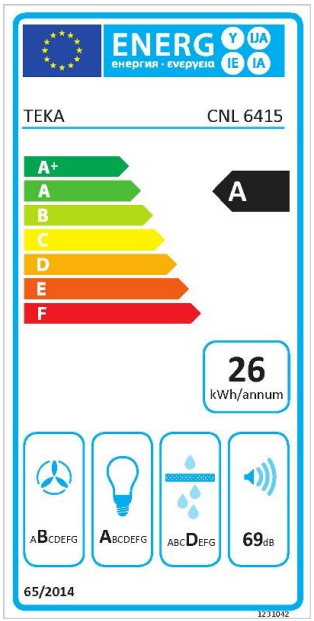
ENERGY LABEL