CNL 6610 60cm Pull-out Hood with Finger Print Proof front panel and 2+1 speeds

LED

Stop Delay Timer

DESCRIPTION	60cm Pull-out Hood with Finger Print Proof front panel and 2+1 speeds
LIFE STYLE	Total
COLOURS	
REFERENCE	REF. 40436830 EAN. 8421152146231

CNL 6610

FEATURES

Pull-out hood
Electronic control
2 speeds + 1 intensive
Free Outlet exhaust capacity (m3/h): 745
Intensive speed exhaust capacity (m3/h): 694
Max speed exhaust capacity (m3/h): 445
Min speed exhaust capacity (m3/h): 330
Intensive speed sound level (dBA): 70
Max speed sound level (dBA): 63
Min speed sound level (dBA): 60
2 LED lamps
2 aluminium filter
Stop delay timer
Fingerprint proof front panel
Exchangeable Front Panel
Anti-return valve included
Outlet reduction included
Optional Charcoal Filter: D4C

CNL 6610

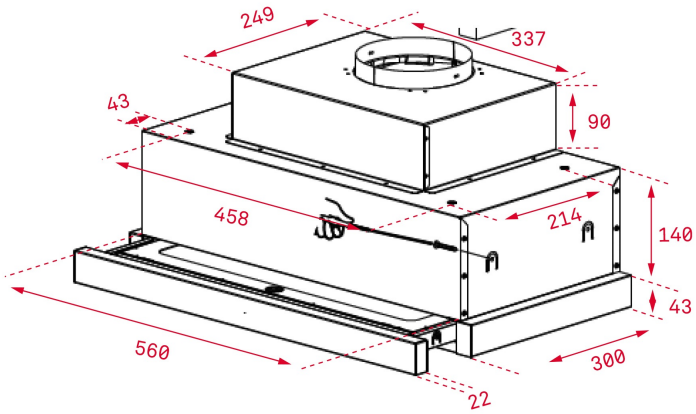

DIMENSIONS

Product height (mm): 274
Product width (mm): 600
Product depth (mm): 300/490
Product length (mm):
Net weight (Kg): 8,33

TECHNICAL DETAILS

FEATURES

Certificates: CE; CB; Rohs
Ø Outlet (mm): 150
Type of inner light: LED
Inside light Consumption (W): 1,5
Plug type: European plug
Power rate (V): 230
Frequency (Hz): 50
Total hood power (W): 233
Number of motors: 1
Motor power (W): 230
Air flow (Qmin) m3/h: 330
Air flow (Qmax): 445
Air flow (Qboost): 694

ACCESSORIES

Anti Return valve: Yes
Outlet reduction: Yes
Outlet extension: No
Optional Charcoal Filter: D4C
Conventional recirculation kit (opt) - w/tube cover: No

MODELS	**Number of filters:** 2 **Filter description:** Aluminum **Control panel:** Electronic **Stop delay timer:** Yes **Automatic lighting:** Yes **Number of speeds:** 2+1 **Fingerprint proof front panel:** Yes

CNL 6610
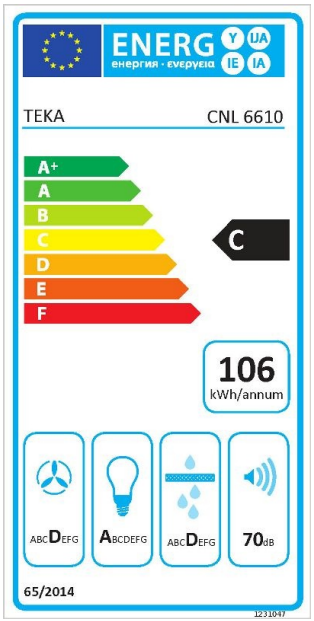
ENERGY LABEL