GFH 73 73cm Built-in Hood with push buttons control panel and 2 aluminum filters

LED

DESCRIPTION	73cm Built-in Hood with push buttons control panel and 2 aluminum filters
LIFE STYLE	Total
COLOURS	
REFERENCE	REF. 40446710 EAN. 8421152036402

GFH 73

FEATURES

Built-in hood
Push buttons control
3 speeds
Free Outlet exhaust capacity (m3/h): 367
Max speed exhaust capacity (m3/h): 329
Min speed exhaust capacity (m3/h): 223
Max speed sound level (dBA): 52
Min speed sound level (dBA): 42
2 LED lamps
2 aluminium filters
Operating pilot light
Anti-return valve included
Optional Charcoal Filter: CNL 1C

GFH 73

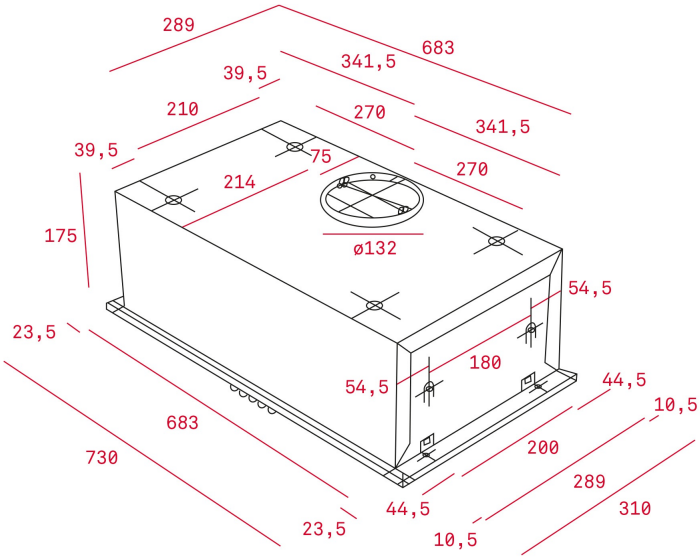

DIMENSIONS

Product height (mm): 175
Product width (mm): 730
Product depth (mm): 310
Product length (mm):
Net weight (Kg): 6,2

TECHNICAL DETAILS

FEATURES

Certificates: CE, CB, Rohs
Ø Outlet (mm): 120
Type of inner light: LED
Inside light Consumption (W): 1,5
Plug type: European plug
Cable Connection Length (cm): 150
Power rate (V): 230
Frequency (Hz): 50
Total hood power (W): 134
Number of motors: 1
Motor power (W): 130
Air flow (Qmin) m3/h: 156
Air flow (Qmax): 315

ACCESSORIES

Anti Return valve: Yes
Outlet extension: no
Optional Charcoal Filter: CNL 1C

MODELS

Number of filters: 2

Filter description: Aluminium
Control panel: Mechanical push bottons
Number of speeds: 3

GFH 73
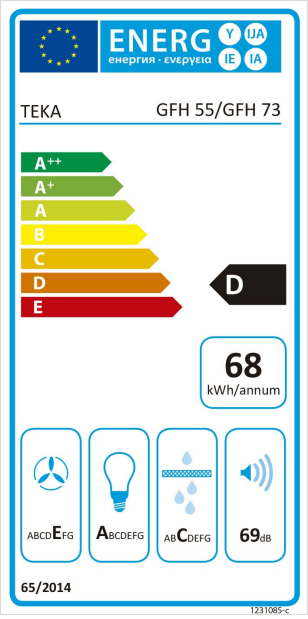
ENERGY LABEL