C 6420 60cm Classical integrated Hood with 2 motors

LED

DESCRIPTION	60cm Classical integrated Hood with 2 motors
LIFE STYLE	Easy
COLOURS	
REFERENCE	REF. 40465530 EAN. 8421152146088

C 6420

FEATURES

Classic hood
Push buttons control
3 speeds
Free Outlet exhaust capacity (m3/h):422
Max speed exhaust capacity (m3/h):375
Min speed exhaust capacity (m3/h): 141
Max speed sound level (dBA): 73
Min speed sound level (dBA): 60
2 LED lamps
2 aluminium filters
Operating pilot light
Fingerprint proof front panel
Anti-return valve included
Optional Charcoal Filter:C1R

C 6420

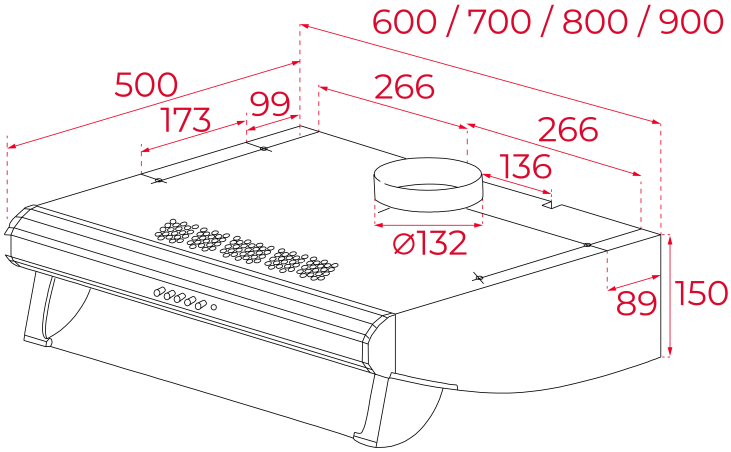

DIMENSIONS

Product height (mm): 150
Product width (mm): 600
Product depth (mm): 500
Product length (mm):
Net weight (Kg): 8,05

TECHNICAL DETAILS

FEATURES

Certificates: CE; CB; Rohs
Ø Outlet (mm): 120
Type of inner light: LED
Inside light Consumption (W): 6
Plug type: European plug
Power rate (V): 230
Frequency (Hz): 50
Total hood power (W): 200
Number of motors: 2
Motor power (W): 188
Air flow (Qmin) m3/h: 187
Air flow (Qmax): 353

ACCESSORIES

Anti Return valve: Yes
Outlet extension: Yes
Optional Charcoal Filter: C1R
Integration Frontal panel Code: No
Conventional recirculation kit (opt) - w/tube cover: No

MODELS	**Number of filters:** 2 **Filter description:** Aluminum **Control panel:** Push buttoms **Number of speeds:** 3 **Fingerprint proof front panel:** Yes

C 6420
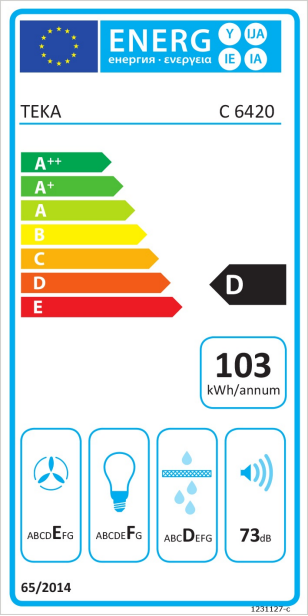
ENERGY LABEL