MLC 844 BK-SS Compact built-in microwave with grill, 45cm

Defrost By Time

Defrost By Weight

44L

DESCRIPTION	Compact built-in microwave with grill, 45cm
COLOURS	
REFERENCE	REF. 40584400 EAN. 8421152151563

MLC 844 BK-SS

FEATURES

Microwave + Grill
3 cooking functions
5 power levels + 1000 W microwave power
1400 W grill
Defrost by time and weight
Touch control display with knobs
Electronic timer (Delay/Start function)
Chrome supports with 5 cooking levels
Removable double glazed door
Automatic disconnection security system
Glass tray and reinforced grid
Capacity (gross/net): 45 / 44 litres

MLC 844 BK-SS

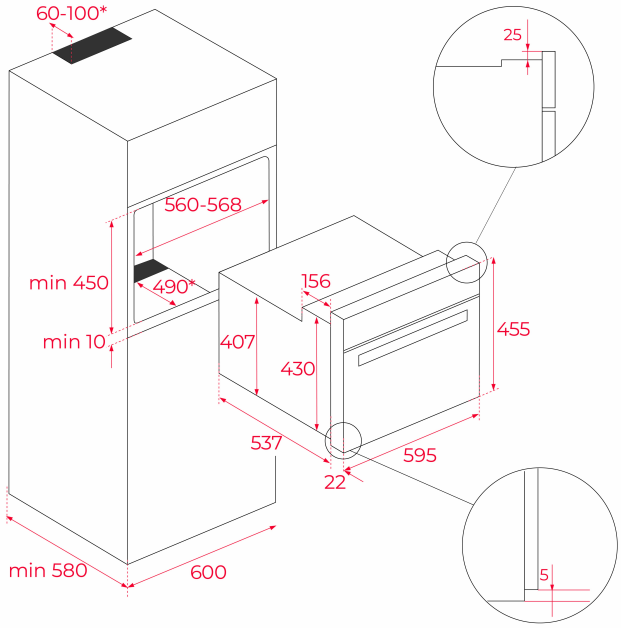

DIMENSIONS

Product height (mm): 455
Product width (mm): 595
Product depth (mm): 559
Product length (mm):
Net weight (Kg): 28,4

TECHNICAL DETAILS

FEATURES

Certificates: CE/CB
Number of cavities: 1
Type of inner light: Halogen
Inside light position: Top rear right
Enamelled cavity: Yes
Min. Temperature Regulator (ºC): 50
Max. Temperature Regulator (ºC): 250
Function selector: Mechanical
Number of cooking functions: 3
Grill function: Yes
Touch Control Programmer: Yes
Minute Minder: Yes
Knobs type: MMX FIX KNOB
Removable chromed tray guides: Yes
Number of guide levels: 5
Number of guide levels (lower cavity): 0
Forced refrigeration tangential 1 speed: Yes
Microwave function: Yes
Microwave + Grill function: Yes
Microwave defrosting: Yes
Number of power levels: 5
Tangential ventilation: Yes

ELECTRIC CONNECTION	**Maximum Nominal Power (W):** 3200 **Frequency (Hz):** 50 **Power rate (V):** 220-240 **Cable Connection Length (cm):** 110 **Inside light Consumption (W):** 25
ENERGY CONSUMPTION	**Grill (W):** 1400 **Cooling Fan Motor (W):** 18
SAFETY SYSTEMS	**Automatic disconnection when opening the door:** Yes **Grill protection:** Yes **Safety Thermostat:** Yes
CLEANING SYSTEM	**Fingerprint proof stainless steel:** Yes **Crystal Clean Enamel (Slippery):** Yes
ACCESSORIES	**Glass Tray:** 1 **Reinforced grid:** 1